GARMIN®

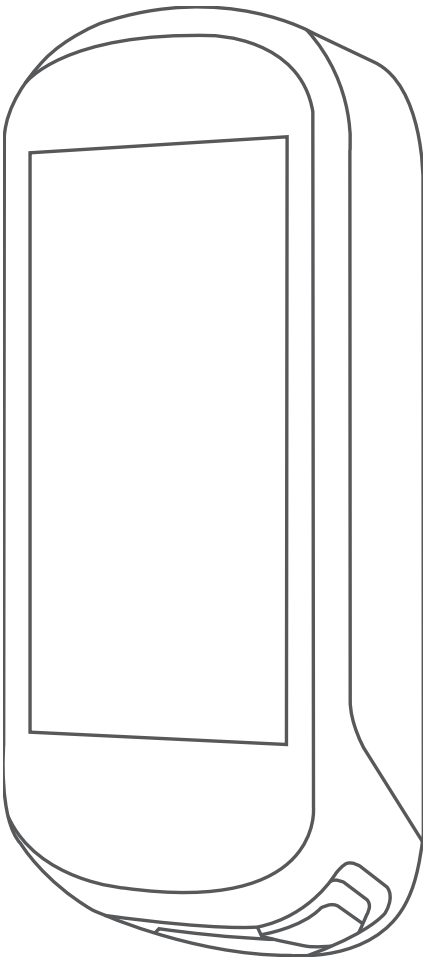

EDGE® 830

Owner's Manual

© 2019 Garmin Ltd. or its subsidiaries

All rights reserved. Under the copyright laws, this manual may not be copied, in whole or in part, without the written consent of Garmin. Garmin reserves the right to change or improve its products and to make changes in the content of this manual without obligation to notify any person or organization of such changes or improvements. Go to www.garmin.com for current updates and supplemental information concerning the use of this product.

Garmin®, the Garmin logo, ANT+®, Auto Lap®, Auto Pause®, Edge®, Forerunner®, inReach®, and Virtual Partner® are trademarks of Garmin Ltd. or its subsidiaries, registered in the USA and other countries. Connect IQ™, Garmin Connect™, Garmin Express™, Varia™, Varia Vision™, and Vector™ are trademarks of Garmin Ltd. or its subsidiaries. These trademarks may not be used without the express permission of Garmin.

Android™ is a trademark of Google Inc. Apple® and Mac® are trademarks of Apple, Inc., registered in the U.S. and other countries. The BLUETOOTH® word mark and logos are owned by the Bluetooth SIG, Inc. and any use of such marks by Garmin is under license. The Cooper Institute®, as well as any related trademarks, are the property of The Cooper Institute. Advanced heartbeat analytics by Firstbeat. Di2™ and Shimano STEPS™ are trademarks of Shimano, Inc. Shimano® is a registered trademark of Shimano, Inc. Training Stress Score™ (TSS), Intensity Factor™ (IF), and Normalized Power™ (NP) are trademarks of Peaksware, LLC. STRAVA and Strava™ are trademarks of Strava, Inc. Wi-Fi® is a registered trademark of Wi-Fi Alliance Corporation. Windows® is a registered trademark of Microsoft Corporation in the United States and other countries. Other trademarks and trade names are those of their respective owners.

This product is ANT+® certified. Visit www.thisisant.com/directory for a list of compatible products and apps.

M/N: AA3485

Table of Contents

Introduction **1**
Device Overview 1
Home Screen Overview 1
Viewing Widgets 1
Using the Touchscreen 1
Locking the Touchscreen 1
Pairing Your Smartphone 1
Charging the Device 2
About the Battery 2
Installing the Standard Mount 2
Installing the Out-Front Mount 2
Releasing the Edge 2
Installing the Mountain Bike Mount 2
Acquiring Satellite Signals 3
Training **3**
Going for a Ride 3
Segments 3
Strava™ Segments 4
Using the Strava Segment Explore Widget 4
Following a Segment From Garmin Connect 4
Enabling Segments 4
Racing a Segment 4
Viewing Segment Details 4
Segment Options 4
Deleting a Segment 4
Workouts 4
Creating a Workout 4
Repeating Workout Steps 5
Following a Workout From Garmin Connect 5
Starting a Workout 5
Stopping a Workout 5
Editing a Workout 5
Deleting Workouts 5
About the Training Calendar 5
Using Garmin Connect Training Plans 5
Interval Workouts 5
Creating an Interval Workout 5
Starting an Interval Workout 6
Training Indoors 6
Pairing Your ANT+® Indoor Trainer 6
Using an ANT+ Indoor Trainer 6
Setting Resistance 6
Setting Target Power 6
Setting a Training Target 6
My Stats **6**
Performance Measurements 6
Training Status 7
About VO2 Max. Estimates 7
Getting Your VO2 Max. Estimate 7
Tips for Cycling VO2 Max. Estimates 7
Heat and Altitude Performance Acclimation 7
Training Load 8
Getting Your Training Load Estimate 8
Training Load Focus 8
About Training Effect 8
Recovery Time 8
Viewing Your Recovery Time 9
Getting Your FTP Estimate 9
Conducting an FTP Test 9
Automatically Calculating FTP 9
Viewing Your Stress Score 9
Turning Off Performance Notifications 9
Viewing Your Power Curve 9
Syncing Activities and Performance Measurements 9
Personal Records 9
Viewing Your Personal Records 9
Reverting a Personal Record 10
Deleting a Personal Record 10
Training Zones 10
Navigation **10**
Locations 10
Marking Your Location 10
Saving Locations from the Map 10
Navigating to a Location 10
Navigating Back to Start 10
Stopping Navigation 10
Editing Locations 10
Deleting a Location 10
Projecting a Location 10
Courses 10
Planning and Riding a Course 11
Creating and Riding a Round-Trip Course 11
Following a Course From Garmin Connect 11
Tips for Riding a Course 11
Viewing Course Details 11
Displaying a Course on the Map 11
Using ClimbPro 12
Course Options 12
Stopping a Course 12
Deleting a Course 12
Trailforks Routes 12
Map Settings 12
Changing the Map Orientation 12
Route Settings 12
Selecting an Activity for Route Calculation 12
Connected Features **12**
Bluetooth Connected Features 12
Incident Detection and Assistance Features 13
Incident Detection 13
Assistance 13
Adding Emergency Contacts 13
Viewing Your Emergency Contacts 13
Requesting Assistance 13
Turning Incident Detection On and Off 13
Cancelling an Automated Message 13
Sending a Status Update After an Incident 13
Starting a GroupTrack Session 13
Tips for GroupTrack Sessions 14
Setting the Bike Alarm 14
Playing Audio Prompts on Your Smartphone 14
Transferring Files to Another Edge Device 14
Wi-Fi Connected Features 14
Setting Up Wi-Fi Connectivity 14
Wi-Fi Settings 14
Wireless Sensors **14**
Putting On the Heart Rate Monitor 15
Setting Your Heart Rate Zones 15
About Heart Rate Zones 15
Fitness Goals 15
Tips for Erratic Heart Rate Data 15
Installing the Speed Sensor 15
Installing the Cadence Sensor 16
About the Speed and Cadence Sensors 16
Data Averaging for Cadence or Power 16
Pairing Your Wireless Sensors 16
Training with Power Meters 16
Setting Your Power Zones 16
Calibrating Your Power Meter 16

Pedal-Based Power ... 17
Cycling Dynamics ... 17
Using Cycling Dynamics ... 17
Updating the Vector Software Using the Edge Device ... 17
Situational Awareness ... 17
Using Electronic Shifters ... 17
Using an eBike ... 17
Viewing eBike Sensor Details ... 17
inReach® Remote ... 17
Using the inReach Remote ... 17
History ... 17
Viewing Your Ride ... 18
Viewing Your Time in Each Training Zone ... 18
Deleting a Ride ... 18
Viewing Data Totals ... 18
Garmin Connect ... 18
Sending Your Ride to Garmin Connect ... 18
Data Recording ... 18
Data Management ... 18
Connecting the Device to Your Computer ... 18
Transferring Files to Your Device ... 18
Deleting Files ... 19
Disconnecting the USB Cable ... 19
Customizing Your Device ... 19
Connect IQ Downloadable Features ... 19
Downloading Connect IQ Features Using Your Computer ... 19
Profiles ... 19
Setting Up Your User Profile ... 19
About Training Settings ... 19
Updating Your Activity Profile ... 19
Adding a Data Screen ... 20
Editing a Data Screen ... 20
Rearranging Data Screens ... 20
Alerts ... 20
Setting Range Alerts ... 20
Setting Recurring Alerts ... 20
Setting Smart Eat and Drink Alerts ... 20
Auto Lap ... 20
Marking Laps by Position ... 20
Marking Laps by Distance ... 20
Using Auto Sleep ... 21
Using Auto Pause ... 21
Using Auto Scroll ... 21
Starting the Timer Automatically ... 21
Changing the Satellite Setting ... 21
Phone Settings ... 21
System Settings ... 21
Display Settings ... 21
Using the Backlight ... 21
Customizing the Widget Loop ... 22
Data Recording Settings ... 22
Changing the Units of Measure ... 22
Turning the Device Tones On and Off ... 22
Changing the Device Language ... 22
Time Zones ... 22
Setting Up Extended Display Mode ... 22
Exiting Extended Display Mode ... 22
Device Information ... 22
Product Updates ... 22
Updating the Software Using the Garmin Connect App ... 22
Updating the Software Using Garmin Express ... 22
Specifications ... 22
Edge Specifications ... 22
Heart Rate Monitor Specifications ... 22
Speed Sensor and Cadence Sensor Specifications ... 22
Viewing Device Information ... 23
Viewing Regulatory and Compliance Information ... 23
Device Care ... 23
Cleaning the Device ... 23
Caring for the Heart Rate Monitor ... 23
User Replaceable Batteries ... 23
Replacing the Heart Rate Monitor Battery ... 23
Replacing the Speed Sensor Battery ... 23
Replacing the Cadence Sensor Battery ... 23
Troubleshooting ... 24
Resetting the Device ... 24
Restoring the Default Settings ... 24
Clearing User Data and Settings ... 24
Maximizing Battery Life ... 24
Turning On Battery Save Mode ... 24
My phone will not connect to the device ... 24
Improving GPS Satellite Reception ... 24
My device is in the wrong language ... 24
Setting Your Elevation ... 24
Calibrating the Compass ... 25
Temperature Readings ... 25
Replacement O-rings ... 25
Getting More Information ... 25
Appendix ... 25
Data Fields ... 25
VO2 Max. Standard Ratings ... 27
FTP Ratings ... 27
Heart Rate Zone Calculations ... 28
Wheel Size and Circumference ... 28
Index ... 29

Introduction

⚠ WARNING

See the *Important Safety and Product Information* guide in the product box for product warnings and other important information.

Always consult your physician before you begin or modify any exercise program.

Device Overview

①	Select to enter sleep mode and wake the device. Hold to turn the device on and off and lock the touchscreen.
②	Select to mark a new lap.
③	Select to start and stop the activity timer.
④ Electrical contacts	Charge using an Edge external battery pack accessory.

NOTE: Go to www.buy.garmin.com to purchase optional accessories.

Home Screen Overview

The home screen gives you quick access to all the features of the Edge device.

	Select to go for a ride. Use the arrows to change your activity profile.
Navigation	Select to mark a location, search for locations, and create or navigate a course.
Training	Select to access your segments, workouts, and other training options.
	Select to access your history, personal records, contacts, and settings.
IQ	Select to access your Connect IQ™ apps, widgets, and data fields.

Viewing Widgets

Your device is preloaded with several widgets, and more are available when you pair your device with a smartphone or other compatible device.

1 From the home screen, swipe down from the top of the screen.

The settings widget appears. A flashing icon means the device is searching for a signal. A solid icon means the signal was found or the sensor is connected. You can select any icon to change the settings.

2 Swipe left or right to view more widgets.

The next time you swipe down to view the widgets, the last widget you viewed appears.

Using the Touchscreen

- When the timer is running, tap the screen to view the timer overlay.

  The timer overlay allows you to return to the home screen during a ride.
- Select ⌂ to return to the home screen.
- Swipe or select the arrows to scroll.
- Select ↩ to return to the previous page.
- Select ✓ to save your changes and close the page.
- Select ✕ to close the page and return to the previous page.
- Select ◎ to search near a location.
- Select 🗑 to delete an item.
- Select ⓘ for more information.

Locking the Touchscreen

You can lock the screen to prevent inadvertent screen touches.

- Hold ▭, and select **Lock Screen**.
- During an activity, select ▭.

Pairing Your Smartphone

To use the connected features of the Edge device, it must be paired directly through the Garmin Connect™ app, instead of from the Bluetooth® settings on your smartphone.

1 From the app store on your smartphone, install and open the Garmin Connect app.

2 Hold ▭ to turn on the device.

  The first time you turn on the device, you will select the device language. The next screen prompts you to pair with your smartphone.

  TIP: You can swipe down on the home screen to view the settings widget, and select **Phone** > **Pair Smartphone** to manually enter pairing mode.

3 Select an option to add your device to your Garmin Connect account:

  - If this is the first device you have paired with the Garmin Connect app, follow the on-screen instructions.
  - If you have already paired another device with the Garmin Connect app, from the ☰ or ••• menu, select **Garmin Devices** > **Add Device**, and follow the on-screen instructions.

After you pair successfully, a message appears, and your device syncs automatically with your smartphone.

Charging the Device

NOTICE

To prevent corrosion, thoroughly dry the USB port, the weather cap, and the surrounding area before charging or connecting to a computer.

The device is powered by a built-in lithium-ion battery that you can charge using a standard wall outlet or a USB port on your computer.

NOTE: The device will not charge when outside the approved temperature range (*Edge Specifications*, page 22).

1 Pull up the weather cap ① from the USB port ②.

2 Plug the small end of the USB cable into the USB port on the device.
3 Plug the large end of the USB cable into an AC adapter or a computer USB port.
4 Plug the AC adapter into a standard wall outlet.
   When you connect the device to a power source, the device turns on.
5 Charge the device completely.

After you charge the device, close the weather cap.

About the Battery

⚠ WARNING

This device contains a lithium-ion battery. See the *Important Safety and Product Information* guide in the product box for product warnings and other important information.

Installing the Standard Mount

For the best GPS reception, position the bike mount so the front of the device is oriented toward the sky. You can install the bike mount on the stem or the handlebars.

1 Select a secure location to mount the device where it does not interfere with the safe operation of your bike.
2 Place the rubber disk ① on the back of the bike mount.
   Two rubber disks are included, and you can select the disk that best fits your bike. The rubber tabs align with the back of the bike mount so it stays in place.

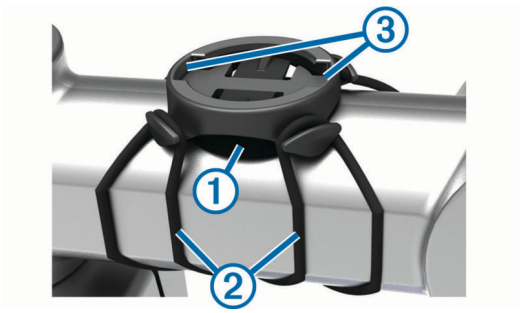

3 Place the bike mount on the bike stem.
4 Attach the bike mount securely using the two bands ②.
5 Align the tabs on the back of the device with the bike mount notches ③.
6 Press down slightly and turn the device clockwise until it locks into place.

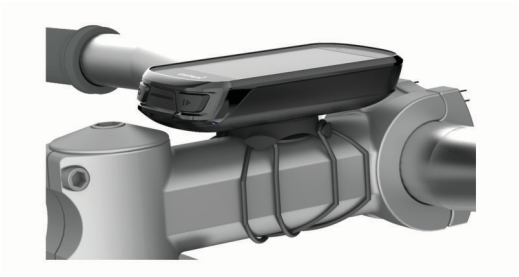

Installing the Out-Front Mount

NOTE: If you do not have this mount, you can skip this task.

1 Select a secure location to mount the Edge device where it does not interfere with the safe operation of your bike.
2 Use the hex key to remove the screw ① from the handlebar connector ②.

3 Place the rubber pad around the handlebar:
   - If the handlebar diameter is 25.4 mm, use the thicker pad.
   - If the handlebar diameter is 31.8 mm, use the thinner pad.
4 Place the handlebar connector around the rubber pad.
5 Replace and tighten the screw.
   NOTE: Garmin® recommends tightening the screw so the mount is secure, with a maximum torque specification of 7 lbf-in. (0.8 N-m). You should check the tightness of the screw periodically.
6 Align the tabs on the back of the Edge device with the bike mount notches ③.

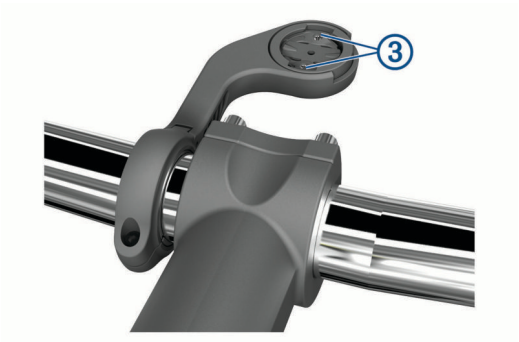

7 Press down slightly and turn the Edge device clockwise until it locks into place.

Releasing the Edge

1 Turn the Edge clockwise to unlock the device.
2 Lift the Edge off the mount.

Installing the Mountain Bike Mount

NOTE: If you do not have this mount, you can skip this task.

1 Select a secure location to mount the Edge device where it does not interfere with the safe operation of your bike.

2 Use the 3 mm hex key to remove the screw ① from the handlebar connector ②.

3 Select an option:
   - If the handlebar diameter is 25.4 mm, place the thicker pad around the handlebar.
   - If the handlebar diameter is 31.8 mm, place the thinner pad around the handlebar.
   - If the handlebar diameter is 35 mm, do not use a rubber pad.
4 Place the handlebar connector around the handlebar, so that the mount arm is above the bike stem.
5 Use the 3 mm hex key to loosen the screw ③ on the mount arm, position the mount arm, and tighten the screw.

   NOTE: Garmin recommends tightening the screw so the mount arm is secure, with a maximum torque specification of 20 lbf-in. (2.26 N-m). You should check the tightness of the screw periodically.

6 If necessary, use the 2 mm hex key to remove the two screws on the back side of the mount ④, remove and rotate the connector, and replace the screws to change the orientation of the mount.
7 Replace and tighten the screw on the handlebar connector.

   NOTE: Garmin recommends tightening the screw so the mount is secure, with a maximum torque specification of 7 lbf-in. (0.8 N-m). You should check the tightness of the screw periodically.
8 Align the tabs on the back of the Edge device with the bike mount notches ⑤.

9 Press down slightly and turn the Edge device clockwise until it locks into place.

Acquiring Satellite Signals

The device may need a clear view of the sky to acquire satellite signals. The time and date are set automatically based on the GPS position.

1 Go outdoors to an open area.

   The front of the device should be oriented toward the sky.
2 Wait while the device locates satellites.

   It may take 30–60 seconds to locate satellite signals.

Training

Going for a Ride

If you are using a wireless sensor or accessory, it can be paired and activated during initial setup (*Pairing Your Wireless Sensors*, page 16). If your device was packaged with a wireless sensor, they are already paired and can be activated during initial setup.

1 Hold ▭ to turn on the device.
2 Go outside, and wait while the device locates satellites.

   The satellite bars turn green when the device is ready.
3 From the home screen, select ❮ or ❯ to select an activity profile.
4 Select 🚲.
5 Select ▶ to start the activity timer.

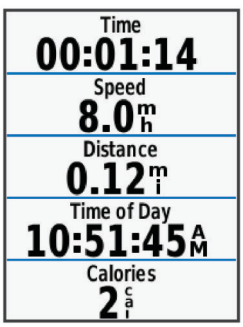

   NOTE: History is recorded only while the activity timer is running.
6 Swipe left or right to view additional data screens.

   You can swipe down from the top of the data screens to view the widgets.
7 If necessary, tap the screen to view the timer overlay.
8 Select ▶ to stop the activity timer.

   TIP: Before you save this ride and share it on your Garmin Connect account, you can change the ride type. Accurate ride type data is important for creating bike friendly courses.
9 Select **Save Ride**.
10 Select ✓.

Segments

Following a segment: You can send segments from your Garmin Connect account to your device. After a segment is saved to your device, you can follow the segment.

NOTE: When you download a course from your Garmin Connect account, all segments in the course are downloaded automatically.

Racing a segment: You can race a segment, trying to match or exceed your personal record or other cyclists who have ridden the segment.

Strava™ Segments

You can download Strava segments to your Edge 830 device. Follow Strava segments to compare your performance with your past rides, friends, and pros who have ridden the same segment.

To sign up for a Strava membership, go to the segments widget in your Garmin Connect account. For more information, go to www.strava.com.

The information in this manual applies to both Garmin Connect segments and Strava segments.

Using the Strava Segment Explore Widget

The Strava Segment Explore widget allows you to view and ride nearby Strava segments.

1. From the Strava Segment Explore widget, select a segment.
2. Select an option:
   - Select ★ to star the segment in your Strava account.
   - Select **Download** > **Ride** to download a segment to your device and ride it.
   - Select **Ride** to ride a downloaded segment.
3. Select ❮ or ❯ to view your segment times, the best times of your friends, and the time of the segment leader.

Following a Segment From Garmin Connect

Before you can download and follow a segment from Garmin Connect, you must have a Garmin Connect account (*Garmin Connect*, page 18).

NOTE: If you are using Strava segments, your starred segments are transferred automatically to your device when it syncs with the Garmin Connect app.

1. Select an option:
   - Open the Garmin Connect app.
   - Go to connect.garmin.com.
2. Select a segment.
3. Select ⇧ or **Send to Device**.
4. Follow the on-screen instructions.
5. On the Edge device, select **Training** > **Segments**.
6. Select the segment.
7. Select **Ride**.

Enabling Segments

You can enable segment racing and prompts that alert you to approaching segments.

1. Select **Training** > **Segments** > ☰ > **Enable/Disable** > **Edit Multiple**.
2. Select the segments to enable.

   NOTE: Prompts alerting you to approaching segments appear only for enabled segments.

Racing a Segment

Segments are virtual race courses. You can race a segment, and compare your performance to past activities, other riders' performance, connections in your Garmin Connect account, or other members of the cycling community. You can upload your activity data to your Garmin Connect account to view your segment position.

NOTE: If your Garmin Connect account and Strava account are linked, your activity is automatically sent to your Strava account so you can review the segment position.

1. Select ▶ to start the activity timer, and go for a ride.

   When your path crosses an enabled segment, you can race the segment.
2. Start racing the segment.

   The segment data screen appears automatically.

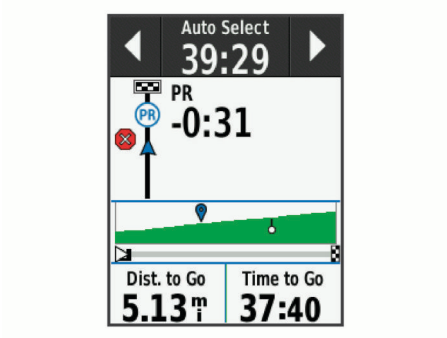

3. If necessary, use the arrows to change your goal during your race.

   You can race against the segment leader, your past performance, or other riders (if applicable). The goal automatically adjusts based on your current performance.

A message appears when the segment is complete.

Viewing Segment Details

1. Select **Training** > **Segments**.
2. Select a segment.
3. Select an option:
   - Select **Map** to view the segment on the map.
   - Select **Elevation** to view an elevation plot of the segment.
   - Select **Leaderboard** to view the ride times and average speeds for the segment leader, group leader or challenger, your personal best time and average speed, and other riders (if applicable).

     TIP: You can select a leaderboard entry to change your segment race goal.

Segment Options

Select **Training** > **Segments** > ☰.

Turn Guidance: Enables or disables turn prompts.

Auto Select Effort: Enables or disables automatic goal adjustment based on your current performance.

Search: Allows you to search for saved segments by name.

Enable/Disable: Enables or disables the segments currently loaded on the device.

Default Leader Priority: Allows you to select the order for goal targets while racing a segment.

Delete: Allows you to delete all or multiple saved segments from the device.

Deleting a Segment

1. Select **Training** > **Segments**.
2. Select a segment.
3. Select 🗑 > ✓.

Workouts

You can create custom workouts that include goals for each workout step and for varied distances, times, and calories. You can create workouts using Garmin Connect, and transfer them to your device. You can also create and save a workout directly on your device.

You can schedule workouts using Garmin Connect. You can plan workouts in advance and store them on your device.

Creating a Workout

1. Select **Training** > **Workouts** > **Create New**.
2. Enter a workout name, and select ✓.
3. Select **Add New Step**.
4. Select the type of workout step.

For example, select Rest to use the step as a rest lap.

During a rest lap, the timer continues to run and data is recorded.

5 Select the workout step duration.

For example, select Distance to end the step after a specific distance.

6 If necessary, enter a custom value for the duration.

7 Select the workout step target type.

For example, select Heart Rate Zone to maintain a consistent heart rate during the step.

8 If necessary, select a target zone or enter a custom range.

For example, you can select a heart rate zone. Each time you exceed or drop below the specified heart rate, the device beeps and displays a message.

9 Select ✓ to save the step.

10 Select **Add New Step** to add additional steps to the workout.

11 Select ✓ to save the workout.

Repeating Workout Steps

Before you can repeat a workout step, you must create a workout with at least one step.

1 Select **Add New Step**.

2 Select an option:

- Select **Repeat** to repeat a step one or more times. For example, you can repeat a 5-mile step ten times.
- Select **Repeat Until** to repeat a step for a specific duration. For example, you can repeat a 5-mile step for 60 minutes or until your heart rate reaches 160 bpm.

3 Select **Back to Step**, and select a step to repeat.

4 Select ✓ to save the step.

Following a Workout From Garmin Connect

Before you can download a workout from Garmin Connect, you must have a Garmin Connect account (*Garmin Connect*, page 18).

1 Select an option:

- Open the Garmin Connect app.
- Go to connect.garmin.com.

2 Find a workout, or create and save a new workout.

3 Select or **Send to Device**.

4 Follow the on-screen instructions.

Starting a Workout

1 Select **Training** > **Workouts**.

2 Select a workout.

3 Select **Ride**.

4 Select ▶ to start the activity timer.

After you begin a workout, the device displays each step of the workout, the target (if any), and current workout data. An audible alarm sounds when you are about to finish a workout step. A message appears, counting down the time or distance until a new step begins.

Stopping a Workout

- At any time, select to end a workout step and begin the next step.
- At any time, swipe up from the bottom of the screen, and select **Restart Step** to end a workout step and restart it.
- At any time, select ▶ to stop the activity timer.
- At any time, swipe down from the top of the screen, and on the controls widget, select **Stop Workout** > ✓ to end the workout.

Editing a Workout

1 Select **Training** > **Workouts**.

2 Select a workout.

3 Select ✎.

4 Select a step, and select **Edit Step**.

5 Change the step attributes, and select ✓.

6 Select ↩ to save the workout.

Deleting Workouts

1 Select **Training** > **Workouts** > ☰ > **Delete Multiple**.

2 Select one or more workouts.

3 Select ✓.

About the Training Calendar

The training calendar on your device is an extension of the training calendar or schedule you set up in Garmin Connect. After you have added a few workouts to the Garmin Connect calendar, you can send them to your device. All scheduled workouts sent to the device appear in the training calendar list by date. When you select a day in the training calendar, you can view or do the workout. The scheduled workout stays on your device whether you complete it or skip it. When you send scheduled workouts from Garmin Connect, they overwrite the existing training calendar.

Using Garmin Connect Training Plans

Before you can download and use a training plan from Garmin Connect, you must have a Garmin Connect account (*Garmin Connect*, page 18).

You can browse Garmin Connect to find a training plan, and schedule workouts and courses.

1 Connect the device to your computer.

2 Go to connect.garmin.com.

3 Select and schedule a training plan.

4 Review the training plan in your calendar.

5 Select an option:

- Sync your device with the Garmin Express™ application on your computer.
- Sync your device with the Garmin Connect app on your smartphone.

Interval Workouts

You can create interval workouts based on distance or time. The device saves your custom interval workout until you create another interval workout. You can use open intervals when you are riding a known distance. When you select , the device records an interval and moves to a rest interval.

Creating an Interval Workout

1 Select **Training** > **Intervals** > **Edit** > **Intervals** > **Type**.

2 Select an option.

TIP: You can create an open-ended interval by setting the type to Open.

3 If necessary, enter a high and low value for the interval.

4 Select **Duration**, enter a time interval value, and select ✓.

5 Select ↩.

6 Select **Rest** > **Type**.

7 Select an option.

8 If necessary, enter a high and low value for the rest interval.

9 Select **Duration**, enter time value for the rest interval, and select ✓.

10 Select ↩.

11 Select one or more options:
- To set the number of repetitions, select **Repeat**.
- To add an open-ended warm up to your workout, select **Warm Up** > **On**.
- To add an open-ended cool down to your workout, select **Cool Down** > **On**.

Starting an Interval Workout

1 Select **Training** > **Intervals** > **Do Workout**.
2 Select ▶ to start the activity timer.
3 When your interval workout has a warm up, select ⟲ to begin the first interval.
4 Follow the on-screen instructions.

When you complete all of the intervals, a message appears.

Training Indoors

The device includes an indoor activity profile where GPS is turned off. When GPS is turned off, speed and distance are not available unless you have a compatible sensor or indoor trainer that sends speed and distance data to the device.

Pairing Your ANT+® Indoor Trainer

1 Bring the device within 3 m (10 ft.) of the ANT+ indoor trainer.
2 Select **Training** > **Indoor Trainer** > **Pair ANT+ Bike Trainer**.
3 Select the indoor trainer to pair with your device.
4 Select **Add**.

When the indoor trainer is paired with your device, the indoor trainer appears as a connected sensor. You can customize your data fields to display sensor data.

Using an ANT+ Indoor Trainer

Before you can use a compatible ANT+ indoor trainer, you must mount your bike on the trainer and pair it with your device (*Pairing Your ANT+® Indoor Trainer*, page 6).

You can use your device with an indoor trainer to simulate resistance while following a course, activity, or workout. While using an indoor trainer, GPS is turned off automatically.

1 Select **Training** > **Indoor Trainer**.
2 Select an option:
- Select **Follow a Course** to follow a saved course (*Courses*, page 10).
- Select **Follow an Activity** to follow a saved ride (*Going for a Ride*, page 3).
- Select **Follow a Workout** to follow a saved workout (*Workouts*, page 4).

3 Select a course, activity, or workout.
4 Select **Ride**.
5 Select ▶ to start the activity timer.

The trainer increases or decreases resistance based on the elevation information in the course or ride.

Setting Resistance

1 Select **Training** > **Indoor Trainer** > **Set Resistance**.
2 Set the resistance force applied by the trainer.
3 Select ▶ to start the activity timer.
4 If necessary, select + or − to adjust the resistance during your activity.

Setting Target Power

1 Select **Training** > **Indoor Trainer** > **Set Target Power**.
2 Set the target power value.
3 Select ▶ to start the activity timer.

The resistance force applied by the trainer is adjusted to maintain a constant power output based on your speed.

4 If necessary, select + or − to adjust the target power during your activity.

Setting a Training Target

The training target feature works with the Virtual Partner® feature so you can train toward a set distance, distance and time, or distance and speed goal. During your training activity, the device gives you real-time feedback about how close you are to achieving your training target.

1 Select **Training** > **Set a Target**.
2 Select an option:
- Select **Distance Only** to select a preset distance or enter a custom distance.
- Select **Distance and Time** to select a distance and time target.
- Select **Distance and Speed** to select a distance and speed target.

The training target screen appears, indicating your estimated finish time. The estimated finish time is based on your current performance and the time remaining.

3 Select ✓.
4 Select ▶ to start the activity timer.
5 If necessary, scroll to view the Virtual Partner screen.
6 After you complete your activity, select ▶ > **Save Ride**.

My Stats

The Edge 830 device can track your personal statistics and calculate performance measurements. Performance measurements require a compatible heart rate monitor or power meter.

Performance Measurements

These performance measurements are estimates that can help you track and understand your training activities and race performances. The measurements require a few activities using wrist-based heart rate or a compatible chest heart rate monitor. Cycling performance measurements require a heart rate monitor and a power meter.

These estimates are provided and supported by Firstbeat. For more information, go to www.garmin.com/performance-data.

NOTE: The estimates may seem inaccurate at first. The device requires you to complete a few activities to learn about your performance.

Training status: Training status shows you how your training affects your fitness and performance. Your training status is based on changes to your training load and VO2 max. over an extended time period.

VO2 max.: VO2 max. is the maximum volume of oxygen (in milliliters) you can consume per minute per kilogram of body weight at your maximum performance. Your device displays heat and altitude corrected VO2 max. values when you are acclimating to high heat environments or high altitude.

Training load: Training load is the sum of your excess post-exercise oxygen consumption (EPOC) over the last 7 days. EPOC is an estimate of how much energy it takes for your body to recover after exercise.

Training load focus: Your device analyzes and distributes your training load into different categories based on the intensity and structure of each activity recorded. Training load focus includes the total load accumulated per category, and the focus of the training. Your device displays your load distribution over the last 4 weeks.

Recovery time: The recovery time displays how much time remains before you are fully recovered and ready for the next hard workout.

Functional threshold power (FTP): The device uses your user profile information from the initial setup to estimate your FTP. For a more accurate rating, you can conduct a guided test.

HRV stress test: The HRV (heart rate variability) stress test requires a Garmin chest heart rate monitor. The device records your heart rate variability while standing still for 3 minutes. It provides your overall stress level. The scale is 1 to 100, and a lower score indicates a lower stress level.

Performance condition: Your performance condition is a real-time assessment after 6 to 20 minutes of activity. It can be added as a data field so you can view your performance condition during the rest of your activity. It compares your real-time condition to your average fitness level.

Power curve: The power curve displays your sustained power output over time. You can view your power curve for the previous month, three months, or twelve months.

Training Status

Training status shows you how your training affects your fitness level and performance. Your training status is based on changes to your training load and VO2 max. over an extended time period. You can use your training status to help plan future training and continue improving your fitness level.

Peaking: Peaking means that you are in ideal race condition. Your recently reduced training load is allowing your body to recover and fully compensate for earlier training. You should plan ahead, since this peak state can only be maintained for a short time.

Productive: Your current training load is moving your fitness level and performance in the right direction. You should plan recovery periods into your training to maintain your fitness level.

Maintaining: Your current training load is enough to maintain your fitness level. To see improvement, try adding more variety to your workouts or increasing your training volume.

Recovery: Your lighter training load is allowing your body to recover, which is essential during extended periods of hard training. You can return to a higher training load when you feel ready.

Unproductive: Your training load is at a good level, but your fitness is decreasing. Your body may be struggling to recover, so you should pay attention to your overall health including stress, nutrition, and rest.

Detraining: Detraining occurs when you are training much less than usual for a week or more, and it is affecting your fitness level. You can try increasing your training load to see improvement.

Overreaching: Your training load is very high and counterproductive. Your body needs a rest. You should give yourself time to recover by adding lighter training to your schedule.

No Status: The device needs one or two weeks of training history, including activities with VO2 max. results from running or cycling, to determine your training status.

About VO2 Max. Estimates

VO2 max. is the maximum volume of oxygen (in milliliters) you can consume per minute per kilogram of body weight at your maximum performance. In simple terms, VO2 max. is an indication of athletic performance and should increase as your level of fitness improves. VO2 max. estimates are provided and supported by Firstbeat. You can use your Garmin device paired with a compatible heart rate monitor and power meter to display your cycling VO2 max. estimate.

Getting Your VO2 Max. Estimate

Before you can view your VO2 max. estimate, you must put on the heart rate monitor, install the power meter, and pair them with your device (*Pairing Your Wireless Sensors*, page 16). If your device was packaged with a heart rate monitor, the device and sensor are already paired. For the most accurate estimate, complete the user profile setup (*Setting Up Your User Profile*, page 19), and set your maximum heart rate (*Setting Your Heart Rate Zones*, page 15).

NOTE: The estimate may seem inaccurate at first. The device requires a few rides to learn about your cycling performance.

1. Ride at a steady, high intensity for at least 20 minutes outdoors.
2. After your ride, select **Save Ride**.
3. Select ☰ > **My Stats** > **Training Status** > **VO2 Max.**.

   Your VO2 max. estimate appears as a number and position on the color gauge.

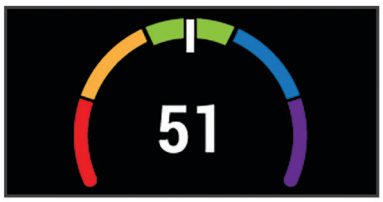

Purple	Superior
Blue	Excellent
Green	Good
Orange	Fair
Red	Poor

VO2 max. data and analysis is provided with permission from The Cooper Institute®. For more information, see the appendix (*VO2 Max. Standard Ratings*, page 27), and go to www.CooperInstitute.org.

Tips for Cycling VO2 Max. Estimates

The success and accuracy of the VO2 max. calculation improves when your ride is a sustained and moderately hard effort, and where heart rate and power are not highly variable.

- Before your ride, check that your device, heart rate monitor, and power meter are functioning properly, paired, and have good battery life.
- During your 20 minute ride, maintain your heart rate at greater than 70% of your maximum heart rate.
- During your 20 minute ride, maintain a fairly constant power output.
- Avoid rolling terrain.
- Avoid riding in groups where there is a lot of drafting.

Heat and Altitude Performance Acclimation

Environmental factors such as high temperature and altitude impact your training and performance. For example, high altitude training can have a positive impact on your fitness, but you may notice a temporary VO2 max. decline while exposed to high altitudes. Your Edge 830 device provides acclimation notifications and corrections to your VO2 max. estimate and training status when the temperature is above 22ºC (72ºF) and when the altitude is above 800 m (2625 ft.). You can keep track of your heat and altitude acclimation in the training status widget.

NOTE: The heat acclimation feature is available only for GPS activities and requires weather data from your connected smartphone. Full acclimation takes a minimum of 4 training days.

Training Load

Training load is a measurement of your training volume over the last seven days. It is the sum of your excess post-exercise oxygen consumption (EPOC) measurements for the last seven days. The gauge indicates whether your current load is low, high, or within the optimal range to maintain or improve your fitness level. The optimal range is determined based on your individual fitness level and training history. The range adjusts as your training time and intensity increase or decrease.

Getting Your Training Load Estimate

Before you can view your training load estimate, you must put on the heart rate monitor, install the power meter, and pair them with your device (*Pairing Your Wireless Sensors*, page 16). If your device was packaged with a heart rate monitor, the device and sensor are already paired. For the most accurate estimate, complete the user profile setup (*Setting Up Your User Profile*, page 19), and set your maximum heart rate (*Setting Your Heart Rate Zones*, page 15).

NOTE: The estimate may seem inaccurate at first. The device requires a few rides to learn about your cycling performance.

1 Ride at least once during a seven day period.
2 Select ☰ > **My Stats** > **Training Status** > **Load**.
   Your training load estimate appears as a number and position on the color gauge.

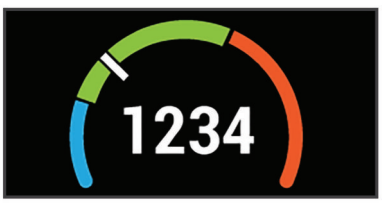

Orange	High
Green	Optimal
Blue	Low

Training Load Focus

In order to maximize performance and fitness gains, training should be distributed across three categories: low aerobic, high aerobic, and anaerobic. Training load focus shows you how much of your training is currently in each category and provides training targets. Training load focus requires at least 7 days of training to determine if your training load is low, optimal, or high. After 4 weeks of training history, your training load estimate will have more detailed target information to help you balance your training activities.

Below targets: Your training load is lower than optimal in all intensity categories. Try increasing the duration or frequency of your workouts.

Low aerobic shortage: Try adding more low aerobic activities to provide recovery and balance for your higher intensity activities.

High aerobic shortage: Try adding more high aerobic activities to help improve your lactate threshold and VO2 max. over time.

Anaerobic shortage: Try adding a few more intense, anaerobic activities to improve your speed and anaerobic capacity over time.

Balanced: Your training load is balanced and provides all-around fitness benefits as you continue training.

Low aerobic focus: Your training load is mostly low aerobic activity. This provides a solid foundation and prepares you for adding more intense workouts.

High aerobic focus: Your training load is mostly high aerobic activity. These activities help to improve lactate threshold, VO2 max., and endurance.

Anaerobic focus: Your training load is mostly intense activity. This leads to rapid fitness gains, but should be balanced with low aerobic activities.

Above targets: Your training load is higher than optimal, and you should consider scaling back the duration and frequency of your workouts.

About Training Effect

Training Effect measures the impact of an activity on your aerobic and anaerobic fitness. Training Effect accumulates during the activity. As the activity progresses, the Training Effect value increases. Training Effect is determined by your user profile information and training history, and heart rate, duration, and intensity of your activity. There are seven different Training Effect labels to describe the primary benefit of your activity. Each label is color coded and corresponds to your training load focus (*Training Load Focus*, page 8). Each feedback phrase, for example, "Highly Impacting VO2 Max." has a corresponding description in your Garmin Connect activity details.

Aerobic Training Effect uses your heart rate to measure how the accumulated intensity of an exercise affects your aerobic fitness and indicates if the workout had a maintaining or improving effect on your fitness level. Your excess post-exercise oxygen consumption (EPOC) accumulated during exercise is mapped to a range of values that account for your fitness level and training habits. Steady workouts at moderate effort or workouts involving longer intervals (>180 sec) have a positive impact on your aerobic metabolism and result in an improved aerobic Training Effect.

Anaerobic Training Effect uses heart rate and speed (or power) to determine how a workout affects your ability to perform at very high intensity. You receive a value based on the anaerobic contribution to EPOC and the type of activity. Repeated high-intensity intervals of 10 to 120 seconds have a highly beneficial impact on your anaerobic capability and result in an improved anaerobic Training Effect.

You can add Aerobic Training Effect and Anaerobic Training Effect as data fields to one of your training screens to monitor your numbers throughout the activity.

Training Effect	Aerobic Benefit	Anaerobic Benefit
From 0.0 to 0.9	No benefit.	No benefit.
From 1.0 to 1.9	Minor benefit.	Minor benefit.
From 2.0 to 2.9	Maintains your aerobic fitness.	Maintains your anaerobic fitness.
From 3.0 to 3.9	Impacts your aerobic fitness.	Impacts your anaerobic fitness.
From 4.0 to 4.9	Highly impacts your aerobic fitness.	Highly impacts your anaerobic fitness.
5.0	Overreaching and potentially harmful without enough recovery time.	Overreaching and potentially harmful without enough recovery time.

Training Effect technology is provided and supported by Firstbeat Technologies Ltd. For more information, go to www.firstbeat.com.

Recovery Time

You can use your Garmin device with wrist-based heart rate or a compatible chest heart rate monitor to display how much time remains before you are fully recovered and ready for the next hard workout.

NOTE: The recovery time recommendation uses your VO2 max. estimate and may seem inaccurate at first. The device requires you to complete a few activities to learn about your performance.

The recovery time appears immediately following an activity. The time counts down until it is optimal for you to attempt another hard workout.

Viewing Your Recovery Time

Before you can use the recovery time feature, you must put on the heart rate monitor, and pair it with your device (*Pairing Your Wireless Sensors*, page 16). If your device was packaged with a heart rate monitor, the device and sensor are already paired. For the most accurate estimate, complete the user profile setup (*Setting Up Your User Profile*, page 19), and set your maximum heart rate (*Setting Your Heart Rate Zones*, page 15).

1 Select ☰ > **My Stats** > **Recovery** > **Enable**.
2 Go for a ride.
3 After your ride, select **Save Ride**.
   The recovery time appears. The maximum time is 4 days, and the minimum time is 6 hours.

Getting Your FTP Estimate

The device uses your user profile information from the initial setup to estimate your functional threshold power (FTP). For a more accurate FTP value, you can conduct an FTP test using a paired power meter and heart rate monitor (*Conducting an FTP Test*, page 9).

Select ☰ > **My Stats** > **FTP**.

Your FTP estimate appears as a value measured in watts per kilogram, your power output in watts, and a position on the color gauge.

Purple	Superior
Blue	Excellent
Green	Good
Orange	Fair
Red	Untrained

For more information, see the appendix (*FTP Ratings*, page 27).

Conducting an FTP Test

Before you can conduct a test to determine your functional threshold power (FTP), you must have a paired power meter and heart rate monitor (*Pairing Your Wireless Sensors*, page 16).

1 Select ☰ > **My Stats** > **FTP** > **FTP Test** > **Ride**.
2 Select ▶ to start the activity timer.
   After you begin your ride, the device displays each step of the test, the target, and current power data. A message appears when the test is complete.
3 Select ▶ to stop the activity timer.
4 Select **Save Ride**.
   Your FTP appears as a value measured in watts per kilogram, your power output in watts, and a position on the color gauge.

Automatically Calculating FTP

Before the device can calculate your functional threshold power (FTP), you must have a paired power meter and heart rate monitor (*Pairing Your Wireless Sensors*, page 16).

1 Select ☰ > **My Stats** > **FTP** > **Enable Auto Calculation**.
2 Ride at a steady, high intensity for at least 20 minutes outdoors.
3 After your ride, select **Save Ride**.
4 Select ☰ > **My Stats** > **FTP**.
   Your FTP appears as a value measured in watts per kilogram, your power output in watts, and a position on the color gauge.

Viewing Your Stress Score

Before you can view your stress score, you must put on a chest heart rate monitor and pair it with your device (*Pairing Your Wireless Sensors*, page 16).

Stress score is the result of a three-minute test performed while standing still, where the Edge device analyzes heart rate variability to determine your overall stress. Training, sleep, nutrition, and general life stress all impact how an athlete performs. The stress score range is 1 to 100, where 1 is a very low stress state, and 100 is a very high stress state. Knowing your stress score can help you decide if your body is ready for a tough workout or yoga.

TIP: Garmin recommends that you measure your stress score at approximately the same time and under the same conditions every day.

1 Select ☰ > **My Stats** > **Stress Score** > **Measure**.
2 Stand still, and rest for 3 minutes.

Turning Off Performance Notifications

Performance notifications are turned on by default. Some performance notifications are alerts that appear upon completion of your activity. Some performance notifications appear during an activity or when you achieve a new performance measurement, such as a new VO2 max. estimate.

1 Select ☰ > **My Stats** > **Performance Notifications**.
2 Select an option.

Viewing Your Power Curve

Before you can view your power curve, you must pair your power meter with your device (*Pairing Your Wireless Sensors*, page 16).

The power curve displays your sustained power output over time. You can view your power curve for the previous month, three months, or twelve months.

1 Select ☰ > **My Stats** > **Power Curve**.
2 Select ❮ or ❯ to select a time period.

Syncing Activities and Performance Measurements

You can sync activities and performance measurements from other Garmin devices to your Edge 830 device using your Garmin Connect account. This allows your device to more accurately reflect your training status and fitness. For example, you can record a run with a Forerunner® device, and view your activity details and overall training load on your Edge 830 device.

1 Select ☰ > **My Stats** > **Training Status**.
2 Select ☰ > **Physio TrueUp**.

When you sync your device with your smartphone, recent activities and performance measurements from your other Garmin devices appear on your Edge 830 device.

Personal Records

When you complete a ride, the device displays any new personal records you achieved during that ride. Personal records include your fastest time over a standard distance, longest ride, and most ascent gained during a ride. When paired with a compatible power meter, the device displays the maximum power reading recorded during a 20-minute period.

Viewing Your Personal Records

Select ☰ > **My Stats** > **Personal Records**.

Reverting a Personal Record

You can set each personal record back to the one previously recorded.

1 Select ☰ > **My Stats** > **Personal Records**.
2 Select a record to revert.
3 Select **Previous Record** > ✓.
   NOTE: This does not delete any saved activities.

Deleting a Personal Record

1 Select ☰ > **My Stats** > **Personal Records**.
2 Select a personal record.
3 Select 🗑 > ✓.

Training Zones

- Heart rate zones (*Setting Your Heart Rate Zones*, page 15)
- Power zones (*Setting Your Power Zones*, page 16)

Navigation

Navigation features and settings also apply to navigating courses (*Courses*, page 10) and segments (*Segments*, page 3).

- Locations and finding places (*Locations*, page 10)
- Planning a course (*Courses*, page 10)
- Route settings (*Route Settings*, page 12)
- Map settings (*Map Settings*, page 12)

Locations

You can record and store locations in the device.

Marking Your Location

Before you can mark a location, you must locate satellites.

If you want to remember landmarks or return to a certain spot, you can mark a location.

1 Go for a ride.
2 Select **Navigation** > ☰ > **Mark Location** > ✓.

Saving Locations from the Map

1 Select **Navigation** > **Browse Map**.
2 Browse the map for the location.
3 Select the location.
   Location information appears at the top of the map.
4 Select the location information.
5 Select ⚑ > ✓.

Navigating to a Location

1 Select **Navigation**.
2 Select an option:
   - Select **Browse Map** to navigate to a location on the map.
   - Select **Search** to navigate to a point of interest, city, address, intersection, or known coordinates.
     TIP: You can select ◎ to narrow your search area.
   - Select **Saved Locations** to navigate to a saved location.
     TIP: You can select ⊞ to enter specific search information.
   - Select **Recent Finds** to navigate to one of the last 50 locations you have found.
   - Select ☰ > **Select Search Area** to narrow your search area.
3 Select a location.
4 Select **Ride**.
5 Follow the on-screen instructions to your destination.

Navigating Back to Start

At any point during your ride, you can return to the starting point.

1 Go for a ride.
2 At any time, swipe down from the top of the screen, and on the controls widget, select **Back to Start**.
3 Select **Along Same Route** or **Most Direct Route**.
4 Select **Ride**.
   The device navigates you back to the starting point of your ride.

Stopping Navigation

1 Scroll to the map.
2 Select ⊗ > ✓.

Editing Locations

1 Select **Navigation** > **Saved Locations**.
2 Select a location.
3 Select the information bar at the top of the screen.
4 Select ✎.
5 Select an attribute.
   For example, select Change Elevation to enter a known altitude for the location.
6 Enter the new information, and select ✓.

Deleting a Location

1 Select **Navigation** > **Saved Locations**.
2 Select a location.
3 Select the location information at the top of the screen.
4 Select ✎ > **Delete Location** > ✓.

Projecting a Location

You can create a new location by projecting the distance and bearing from a marked location to a new location.

1 Select **Navigation** > **Saved Locations**.
2 Select a location.
3 Select the location information at the top of the screen.
4 Select ✎ > **Project Location**.
5 Enter the bearing and distance to the projected location.
6 Select ✓.

Courses

Following a previously recorded activity: You can follow a saved course simply because it is a good route. For example, you can save and follow a bike friendly commute to work.

Racing against a previously recorded activity: You can also follow a saved course, trying to match or exceed previously set performance goals. For example, if the original course was completed in 30 minutes, you can race against a Virtual Partner trying to complete the course in under 30 minutes.

Following an existing ride from Garmin Connect: You can send a course from Garmin Connect to your device. Once it

is saved to your device, you can follow the course or race against the course.

Planning and Riding a Course

You can create and ride a custom course. A course is a sequence of waypoints or locations that leads you to your final destination.

1. Select **Navigation** > **Courses** > **Course Creator** > **Add First Location**.
2. Select an option:
   - To select your current location on the map, select **Current Location**.
   - To select a saved location, select **Saved**, and select a location.
   - To select a location for which you recently searched, select **Recent Finds**, and select a location.
   - To select a location on the map, select **Use Map**, and select a location.
   - To browse for and select a point of interest, select **POI Categories**, and select a nearby point of interest.
   - To select a city, select **Cities**, and select a nearby city.
   - To select an address, select **Addresses**, and enter the address.
   - To select an intersection, select **Intersections**, and enter the street names.
   - To use coordinates, select **Coordinates**, and enter the coordinates.
3. Select **Use**.

   TIP: From the map, you can select another location, and select Use to continue adding locations.
4. Select **Add Next Location**.
5. Repeat steps 2 through 4 until you have selected all locations for the route.
6. Select **View Map**.

   The device calculates your route, and a map of the route appears.

   TIP: You can select ⛰ to view an elevation plot of the route.
7. Select **Ride**.

Creating and Riding a Round-Trip Course

The device can create a round-trip course based on a specified distance, starting location, and direction of navigation.

1. Select **Navigation** > **Courses** > **Round-Trip Course**.
2. Select **Distance**, and enter the total distance for the course.
3. Select **Start Location**.
4. Select an option:
   - To select your current location on the map, select **Current Location**.
   - To select a location on the map, select **Use Map**, and select a location.
   - To select a saved location, select **Saved Locations**, and select a location.
   - To browse for and select a point of interest, select **Search Tools** > **POI Categories**, and select a nearby point of interest.
   - To select a city, select **Search Tools** > **Cities**, and select a nearby city.
   - To select an address, select **Search Tools** > **Addresses**, and enter the address.
   - To select an intersection, select **Search Tools** > **Intersections**, and enter the street names.
   - To use coordinates, select **Search Tools** > **Coordinates**, and enter the coordinates.
5. Select **Start Direction**, and select a direction heading.
6. Select **Search**.

   TIP: You can select ⟲ to search again.
7. Select a course to view it on the map.

   TIP: You can select ❮ and ❯ to view the other courses.
8. Select **Ride**.

Following a Course From Garmin Connect

Before you can download a course from Garmin Connect, you must have a Garmin Connect account (*Garmin Connect*, page 18).

1. Select an option:
   - Open the Garmin Connect app.
   - Go to connect.garmin.com.
2. Create a new course, or select an existing course.
3. Select ⇧ or **Send to Device**.
4. Follow the on-screen instructions.
5. On the Edge device, select **Navigation** > **Courses** > **Saved Courses**.
6. Select the course.
7. Select **Ride**.

Tips for Riding a Course

- Use turn guidance (*Course Options*, page 12).
- If you include a warmup, select ▶ to begin the course, and warm up as normal.
- Stay away from your course path as you warm up.

  When you are ready to begin, head toward your course. When you are on any part of the course path, a message appears.
- Scroll to the map to view the course map.

  If you stray from the course, a message appears.

Viewing Course Details

1. Select **Navigation** > **Courses** > **Saved Courses**.
2. Select a course.
3. Select an option:
   - Select **Summary** to view details about the course.
   - Select **Map** to view the course on the map.
   - Select **Elevation** to view an elevation plot of the course.
   - Select **Climbs** to view details and elevation plots for each climb.
   - Select **Laps** to select a lap and view additional information about each lap.

Displaying a Course on the Map

For each course saved to your device, you can customize how it appears on the map. For example, you can set your commute course to always display on the map in yellow. You can have an alternate course display in green. This allows you to see the courses while you are riding, but not follow or navigate a particular course.

1. Select **Navigation** > **Courses** > **Saved Courses**.
2. Select the course.
3. Select **Settings**.
4. Select **Always Display** to make the course appear on the map.
5. Select **Color**, and select a color.
6. Select **Course Points** to include course points on the map.

The next time you ride near the course, it appears on the map.

Using ClimbPro

The ClimbPro feature helps you manage your effort for the upcoming climbs on a course. Before your ride, you can view details about the climbs, including when they occur, average gradient, and total ascent. The climb categories, based on length and gradient, are indicated by color.

1. Enable the ClimbPro feature for the activity profile (*Updating Your Activity Profile*, page 19).
2. Review the climbs and course details for the course (*Viewing Course Details*, page 11).
3. Start following a saved course (*Courses*, page 10).

   At the start of a climb, the ClimbPro screen appears automatically.

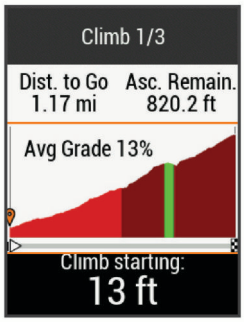

Course Options

Select **Navigation** > **Courses** > **Saved Courses** > ☰.

Turn Guidance: Enables or disables turn prompts.

Off Crs. Warnings: Alerts you if you stray from the course.

Search: Allows you to search for saved courses by name.

Filter: Allows you to filter by course type, such as Strava courses.

Sort: Allows you to sort saved courses by name, distance, or date.

Delete: Allows you to delete all or multiple saved courses from the device.

Stopping a Course

1. Scroll to the map.
2. Select ⊗ > ✓.

Deleting a Course

1. Select **Navigation** > **Courses** > **Saved Courses**.
2. Select a course.
3. Select 🗑 > ✓.

Trailforks Routes

With the Trailforks app, you can save your favorite trail routes or browse for routes nearby. You can download Trailforks mountain bike trail routes to your Edge device. Downloaded routes appear in the saved courses list.

To sign up for a Trailforks membership, go to www.trailforks.com.

Map Settings

Select ☰ > **Activity Profiles**, select a profile, and select **Navigation** > **Map**.

Orientation: Sets how the map is shown on the page.

Auto Zoom: Automatically selects a zoom level for the map. When Off is selected, you must zoom in or out manually.

Guide Text: Sets when the turn-by-turn navigation prompts are shown (requires routable maps).

Map Visibility: Allows you to set advanced map features.

Map Information: Enables or disables the maps currently loaded on the device.

Draw Contours: Shows or hides contour lines on the map.

Changing the Map Orientation

1. Select ☰ > **Activity Profiles**.
2. Select a profile.
3. Select **Navigation** > **Map** > **Orientation**.
4. Select an option:
   - Select **North Up** to show north at the top of the page.
   - Select **Track Up** to show your current direction of travel at the top of the page.
   - Select **3D Mode** to display the map in three dimensions.

Route Settings

Select ☰ > **Activity Profiles**, select a profile, and select **Navigation** > **Routing**.

Popularity Routing: Calculates routes based on the most popular rides from Garmin Connect.

Routing Mode: Sets the transportation method to optimize your route.

Calculation Method: Sets the method used to calculate your route.

Lock on Road: Locks the position icon, which represents your position on the map, onto the nearest road.

Avoidance Setup: Sets the road types to avoid while navigating.

Recalculation: Automatically recalculates the route when you deviate from the route.

Selecting an Activity for Route Calculation

You can set the device to calculate the route based on activity type.

1. Select ☰ > **Activity Profiles**.
2. Select a profile.
3. Select **Navigation** > **Routing** > **Routing Mode**.
4. Select an option to calculate your route.

   For example, you can select Road Cycling for on-road navigation or Mountain Biking for off-road navigation.

Connected Features

Connected features are available for your Edge device when you connect the device to a Wi-Fi® network or to a compatible smartphone using Bluetooth wireless technology.

Bluetooth Connected Features

The Edge device has several Bluetooth connected features for your compatible smartphone using the Garmin Connect and Connect IQ apps. Go to www.garmin.com/apps for more information.

Activity uploads to Garmin Connect: Automatically sends your activity to Garmin Connect as soon as you finish recording the activity.

Assistance: Allows you to send an automated text message with your name and GPS location to your emergency contacts using the Garmin Connect app.

Audio prompts: Allows the Garmin Connect app to play status announcements on your smartphone during a ride.

Bike alarm: Allows you to enable an alarm that sounds on the device and sends an alert to your smartphone when the device detects motion.

Connect IQ downloadable features: Allows you to download Connect IQ features from the Connect IQ app.

Course, segment, and workout downloads from Garmin Connect: Allows you to search for activities on Garmin Connect using your smartphone and send them to your device.

Device to device transfers: Allows you to wirelessly transfer files to another compatible Edge device.

Find my Edge: Locates your lost Edge device that is paired with your smartphone and currently within range.

GroupTrack: Allows you to keep track of other riders in your group using LiveTrack directly on screen and in real time. You can send preset messages to other riders in your GroupTrack session who have a compatible Edge device.

Incident detection: Allows the Garmin Connect app to send a message to your emergency contacts when the Edge device detects an incident.

LiveTrack: Allows friends and family to follow your races and training activities in real time. You can invite followers using email or social media, allowing them to view your live data on a Garmin Connect tracking page.

Messages: Allows you to reply to an incoming call or text message with a preset text message. This feature is available with compatible Android™ smartphones.

Notifications: Displays phone notifications and messages on your device.

Social media interactions: Allows you to post an update to your favorite social media website when you upload an activity to Garmin Connect.

Weather updates: Sends real-time weather conditions and alerts to your device.

Incident Detection and Assistance Features

Incident Detection

⚠ CAUTION

Incident detection is a supplemental feature primarily designed for road use. Incident detection should not be relied on as a primary method to obtain emergency assistance. The Garmin Connect app does not contact emergency services on your behalf.

When an incident is detected by your Edge device with GPS enabled, the Garmin Connect app can send an automated text message and email with your name and GPS location to your emergency contacts.

A message appears on your device and paired smartphone indicating your contacts will be informed after 30 seconds have elapsed. If assistance is not needed, you can cancel the automated emergency message.

Before you can enable incident detection on your device, you must set up emergency contact information in the Garmin Connect app. Your paired smartphone must be equipped with a data plan and be in an area of network coverage where data is available. Your emergency contacts must be able to receive text messages (standard text messaging rates may apply).

Assistance

⚠ CAUTION

Assistance is a supplemental feature and should not be relied on as a primary method to obtain emergency assistance. The Garmin Connect app does not contact emergency services on your behalf.

When your Edge device with GPS enabled is connected to the Garmin Connect app, you can send an automated text message with your name and GPS location to your emergency contacts.

Before you can enable the assistance feature on your device, you must set up emergency contact information in the Garmin Connect app. Your Bluetooth paired smartphone must be equipped with a data plan and be in an area of network coverage where data is available. Your emergency contacts must be able to receive text messages (standard text messaging rates may apply).

A message appears on your device indicating your contacts will be informed after a countdown has elapsed. If assistance is not needed, you can cancel the message.

Adding Emergency Contacts

Emergency contact phone numbers are used for the incident detection and assistance features.

1. From the Garmin Connect app, select ☰ or •••.
2. Select **Safety & Tracking** > **Incident Detection & Assistance** > **Add Emergency Contact**.
3. Follow the on-screen instructions.

Viewing Your Emergency Contacts

Before you can view your emergency contacts on your device, you must set up your rider information and emergency contacts in the Garmin Connect app.

Select ☰ > **Safety & Tracking** > **Emergency Contacts**.

Your emergency contacts' names and phone numbers appear.

Requesting Assistance

Before you can request assistance, you must enable GPS on your Edge device.

1. Hold ⊖ for five seconds to activate the assistance feature.

   The device beeps, and sends the message after the five-second countdown is complete.

   TIP: You can select ✖ before the countdown is complete to cancel the message.
2. If necessary, select **Send** to send the message immediately.

Turning Incident Detection On and Off

1. Select ☰ > **Safety & Tracking** > **Incident Detection**.
2. Select the activity profile to enable incident detection.

Cancelling an Automated Message

When an incident is detected by your device, you can cancel the automated emergency message on your device or your paired smartphone before it is sent to your emergency contacts.

Select **Cancel** > ✔ before the end of the thirty-second countdown.

Sending a Status Update After an Incident

Before you can send a status update to your emergency contacts, your device must detect an incident and send an automated emergency message to your emergency contacts.

You can send a status update to your emergency contacts informing them you are not in need of assistance.

1. Swipe down from the top of the screen, and swipe left or right to view the controls widget.
2. Select **Incident Detected** > **I'm Okay**.

   A message is sent to all emergency contacts.

Starting a GroupTrack Session

Before you can start a GroupTrack session, you must have a smartphone with the Garmin Connect app paired to your device (*Pairing Your Smartphone*, page 1).

During a ride, you can see the riders in your GroupTrack session on the map.

1. On the Edge device, select ☰ > **Safety & Tracking** > **GroupTrack** to enable viewing connections on the map screen.
2. From the Garmin Connect app, select ☰ or •••.
3. Select **Safety & Tracking** > **LiveTrack** > **GroupTrack**.
4. Select **Visible to** > **All Connections**.

NOTE: If you have more than one compatible device, you must select a device for the GroupTrack session.

5 Select **Start LiveTrack**.

6 On the Edge device, select ▶, and go for a ride.

7 Scroll to the map to view your connections.

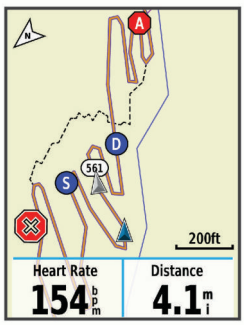

You can tap an icon on the map to view location and heading information for other riders in the GroupTrack session.

8 Scroll to the GroupTrack list.

You can select a rider from the list, and that rider appears centered on the map.

Tips for GroupTrack Sessions

The GroupTrack feature allows you to keep track of other riders in your group using LiveTrack directly on the screen. All riders in the group must be your connections in your Garmin Connect account.

- Ride outside using GPS.
- Pair your Edge 830 device with your smartphone using Bluetooth technology.
- In the Garmin Connect app, select ☰ or •••, and select **Connections** to update the list of riders for your GroupTrack session.
- Make sure all of your connections pair to their smartphones and start a LiveTrack session in the Garmin Connect app.
- Make sure all your connections are in range (40 km or 25 mi.).
- During a GroupTrack session, scroll to the map to view your connections.
- Stop riding before you attempt to view location and heading information for other riders in the GroupTrack session.

Setting the Bike Alarm

You can turn on the bike alarm when you are away from your bike, such as on a stop during a long ride. You can control the bike alarm from your device or the device settings in the Garmin Connect app.

1 Select ☰ > **Safety & Tracking** > **Bike Alarm**.

2 Create or update your passcode.

When you disable the bike alarm from your Edge device, you are prompted to enter the passcode.

3 Swipe down from the top of the screen, and on the controls widget, select **Set Bike Alarm**.

If the device detects motion, it sounds an alarm and sends an alert to your connected smartphone.

Playing Audio Prompts on Your Smartphone

Before you can set up audio prompts, you must have a smartphone with the Garmin Connect app paired to your Edge device.

You can set the Garmin Connect app to play motivational status announcements on your smartphone during a ride or other activity. Audio prompts include the lap number and lap time, navigation, power, pace or speed, and heart rate data. During an audio prompt, the Garmin Connect app mutes the primary audio of the smartphone to play the announcement. You can customize the volume levels on the Garmin Connect app.

1 From the Garmin Connect app, select ☰ or •••.

2 Select **Garmin Devices**.

3 Select your device.

4 Select **Activity Options** > **Audio Prompts**.

Transferring Files to Another Edge Device

You can transfer courses, segments, and workouts wirelessly from one compatible Edge device to another using Bluetooth technology.

1 Turn on both Edge devices, and bring them within range (3 m) of each other.

2 From the device that contains the files, select ☰ > **Connected Features** > **Device Transfers** > **Share Files**.

NOTE: The Device Transfers menu may be in a different location for other Edge devices.

3 Select a file type to share.

4 Select one or more files to transfer.

5 From the device that receives the files, select ☰ > **Connected Features** > **Device Transfers**.

6 Select a nearby connection.

7 Select one or more files to receive.

A message appears on both devices after the file transfer is complete.

Wi-Fi Connected Features

Activity uploads to your Garmin Connect account: Automatically sends your activity to your Garmin Connect account as soon as you finish recording the activity.

Software updates: Your device downloads and installs the latest software update automatically when a Wi-Fi connection is available.

Workouts and training plans: You can browse for and select workouts and training plans on the Garmin Connect site. The next time your device has a Wi-Fi connection, the files are wirelessly sent to your device.

Setting Up Wi-Fi Connectivity

You must connect your device to the Garmin Connect app on your smartphone or to the Garmin Express application on your computer before you can connect to a Wi-Fi network.

1 Select an option:

- Download the Garmin Connect app, and pair your smartphone (*Pairing Your Smartphone*, page 1).
- Go to www.garmin.com/express, and download the Garmin Express application.

2 Follow the on-screen instructions to set up Wi-Fi connectivity.

Wi-Fi Settings

Select ☰ > **Connected Features** > **Wi-Fi**.

Wi-Fi: Enables Wi-Fi wireless technology.

NOTE: Other Wi-Fi settings appear only when Wi-Fi is enabled.

Auto Upload: Allows you to upload activities automatically over a known wireless network.

Add Network: Connects your device to a wireless network.

Wireless Sensors

Your device can be used with wireless ANT+ or Bluetooth sensors. For more information about compatibility and purchasing optional sensors, go to buy.garmin.com.

Putting On the Heart Rate Monitor

NOTE: If you do not have a heart rate monitor, you can skip this task.

You should wear the heart rate monitor directly on your skin, just below your sternum. It should be snug enough to stay in place during your activity.

1 Snap the heart rate monitor module ① onto the strap.

The Garmin logos on the module and the strap should be right-side up.

2 Wet the electrodes ② and the contact patches ③ on the back of the strap to create a strong connection between your chest and the transmitter.

3 Wrap the strap around your chest, and connect the strap hook ④ to the loop ⑤.

NOTE: The care tag should not fold over.

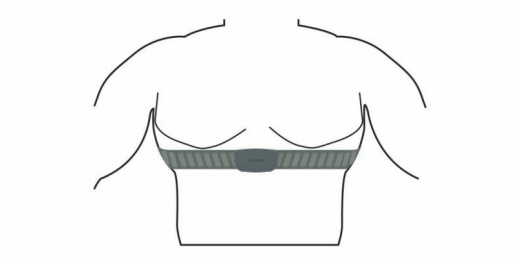

The Garmin logos should be right-side up.

4 Bring the device within 3 m (10 ft.) of the heart rate monitor.

After you put on the heart rate monitor, it is active and sending data.

TIP: If the heart rate data is erratic or does not appear, see the troubleshooting tips (*Tips for Erratic Heart Rate Data*, page 15).

Setting Your Heart Rate Zones

The device uses your user profile information from the initial setup to determine your heart rate zones. You can manually adjust the heart rate zones according to your fitness goals (*Fitness Goals*, page 15). For the most accurate calorie data during your activity, you should set your maximum heart rate, resting heart rate, and heart rate zones.

1 Select ☰ > **My Stats** > **Training Zones** > **Heart Rate Zones**.

2 Enter your maximum, lactate threshold, and resting heart rate values.

You can use the auto detect feature to automatically detect your heart rate during an activity. The zone values update automatically, but you can also edit each value manually.

3 Select **Based On:**.

4 Select an option:

- Select **BPM** to view and edit the zones in beats per minute.
- Select **% Max.** to view and edit the zones as a percentage of your maximum heart rate.
- Select **% HRR** to view and edit the zones as a percentage of your heart rate reserve (maximum heart rate minus resting heart rate).
- Select **%LTHR** to view and edit the zones as a percentage of your lactate threshold heart rate.

About Heart Rate Zones

Many athletes use heart rate zones to measure and increase their cardiovascular strength and improve their level of fitness. A heart rate zone is a set range of heartbeats per minute. The five commonly accepted heart rate zones are numbered from 1 to 5 according to increasing intensity. Generally, heart rate zones are calculated based on percentages of your maximum heart rate.

Fitness Goals

Knowing your heart rate zones can help you measure and improve your fitness by understanding and applying these principles.

- Your heart rate is a good measure of exercise intensity.
- Training in certain heart rate zones can help you improve cardiovascular capacity and strength.

If you know your maximum heart rate, you can use the table (*Heart Rate Zone Calculations*, page 28) to determine the best heart rate zone for your fitness objectives.

If you do not know your maximum heart rate, use one of the calculators available on the Internet. Some gyms and health centers can provide a test that measures maximum heart rate. The default maximum heart rate is 220 minus your age.

Tips for Erratic Heart Rate Data

If the heart rate data is erratic or does not appear, you can try these tips.

- Reapply water to the electrodes and contact patches (if applicable).
- Tighten the strap on your chest.
- Warm up for 5 to 10 minutes.
- Follow the care instructions (*Caring for the Heart Rate Monitor*, page 23).
- Wear a cotton shirt or thoroughly wet both sides of the strap.

  Synthetic fabrics that rub or flap against the heart rate monitor can create static electricity that interferes with heart rate signals.
- Move away from sources that can interfere with your heart rate monitor.

  Sources of interference may include strong electromagnetic fields, some 2.4 GHz wireless sensors, high-voltage power lines, electric motors, ovens, microwave ovens, 2.4 GHz cordless phones, and wireless LAN access points.

Installing the Speed Sensor

NOTE: If you do not have this sensor, you can skip this task.

TIP: Garmin recommends you secure your bike on a stand while installing the sensor.

1 Place and hold the speed sensor on top of the wheel hub.

2 Pull the strap ① around the wheel hub, and attach it to the hook ② on the sensor.

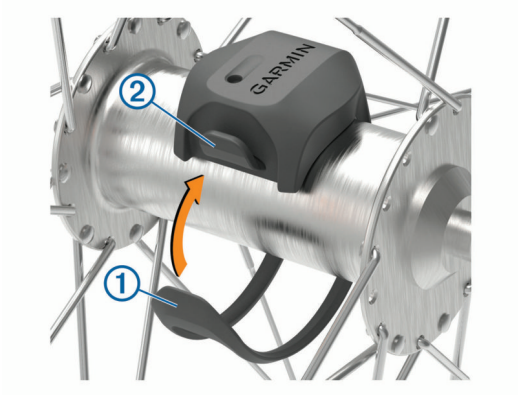

The sensor may be tilted when installed on an asymmetrical hub. This does not affect operation.

3 Rotate the wheel to check for clearance.

The sensor should not contact other parts of your bike.

NOTE: The LED flashes green for five seconds to indicate activity after two revolutions.

Installing the Cadence Sensor

NOTE: If you do not have this sensor, you can skip this task.

TIP: Garmin recommends you secure your bike on a stand while installing the sensor.

1 Select the band size that fits your crank arm ① securely.

The band you select should be the smallest one that stretches across the crank arm.

2 On the non-drive side, place and hold the flat side of the cadence sensor on the inside of the crank arm.

3 Pull the bands ② around the crank arm, and attach them to the hooks ③ on the sensor.

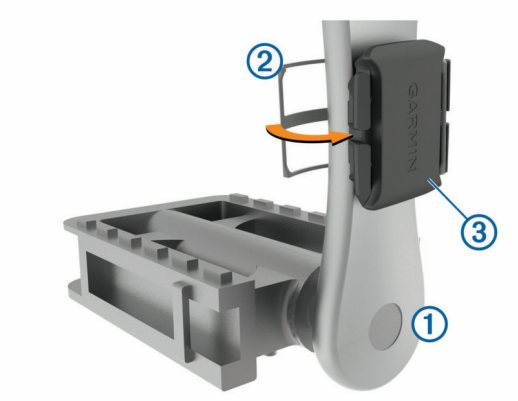

4 Rotate the crank arm to check for clearance.

The sensor and bands should not contact any part of your bike or shoe.

NOTE: The LED flashes green for five seconds to indicate activity after two revolutions.

5 Take a 15 minute test ride and inspect the sensor and bands to ensure there is no evidence of damage.

About the Speed and Cadence Sensors

Cadence data from the cadence sensor is always recorded. If no speed and cadence sensors are paired with the device, GPS data is used to calculate the speed and distance.

Cadence is your rate of pedaling or “spinning” measured by the number of revolutions of the crank arm per minute (rpm).

Data Averaging for Cadence or Power

The non-zero data-averaging setting is available if you are training with an optional cadence sensor or power meter. The default setting excludes zero values that occur when you are not pedaling.

You can change the value of this setting (*Data Recording Settings*, page 22).

Pairing Your Wireless Sensors

Before you can pair, you must put on the heart rate monitor or install the sensor.

Pairing is the connecting of ANT+ or Bluetooth wireless sensors, for example, connecting a heart rate monitor with your Garmin device.

1 Bring the device within 3 m (10 ft.) of the sensor.

NOTE: Stay 10 m (33 ft.) away from other riders' sensors while pairing.

2 Select ☰ > **Sensors** > **Add Sensor**.

3 Select an option:

- Select a sensor type.
- Select **Search All** to search for all nearby sensors.

A list of available sensors appears.

4 Select one or more sensors to pair with your device.

5 Select **Add**.

When the sensor is paired with your device, the sensor status is Connected. You can customize a data field to display sensor data.

Training with Power Meters

- Go to www.garmin.com/intosports for a list of ANT+ sensors that are compatible with your device (such as Vector™).
- For more information, see the owner's manual for your power meter.
- Adjust your power zones to match your goals and abilities (*Setting Your Power Zones*, page 16).
- Use range alerts to be notified when you reach a specified power zone (*Setting Range Alerts*, page 20).
- Customize the power data fields (*Adding a Data Screen*, page 20).

Setting Your Power Zones

The values for the zones are default values and may not match your personal abilities. You can manually adjust your zones on the device or using Garmin Connect. If you know your functional threshold power (FTP) value, you can enter it and allow the software to calculate your power zones automatically.

1 Select ☰ > **My Stats** > **Training Zones** > **Power Zones**.

2 Enter your FTP value.

3 Select **Based On:**.

4 Select an option:

- Select **watts** to view and edit the zones in watts.
- Select **% FTP** to view and edit the zones as a percentage of your functional threshold power.

Calibrating Your Power Meter

Before you can calibrate your power meter, you must install it, pair it with your device, and begin actively recording data with it.

For calibration instructions specific to your power meter, see the manufacturer's instructions.

1 Select ☰ > **Sensors**.

2 Select your power meter.

3 Select **Calibrate**.

4 Keep your power meter active by pedaling until the message appears.

5 Follow the on-screen instructions.

Pedal-Based Power

Vector measures pedal-based power.

Vector measures the force you apply a few hundred times every second. Vector also measures your cadence or rotational pedaling speed. By measuring the force, the direction of force, the rotation of the crank arm, and time, Vector can determine power (watts). Because Vector independently measures left and right leg power, it reports your left-right power balance.

NOTE: The Vector S system does not provide left-right power balance.

Cycling Dynamics

Cycling dynamics metrics measure how you apply power throughout the pedal stroke, and where you apply power on the pedal, allowing you to understand your particular way of riding. Understanding how and where you produce power allows you to train more efficiently and evaluate your bike fit.

NOTE: You must have a dual sensing Edge system to use cycling dynamics metrics.

For more information, go to www.garmin.com/performance-data.

Using Cycling Dynamics

Before you can use cycling dynamics, you must pair the Vector power meter with your device (*Pairing Your Wireless Sensors*, page 16).

NOTE: Recording cycling dynamics uses additional device memory.

1. Go for a ride.
2. Scroll to the cycling dynamics screen to view your power phase data ①, total power ②, and platform center offset ③.

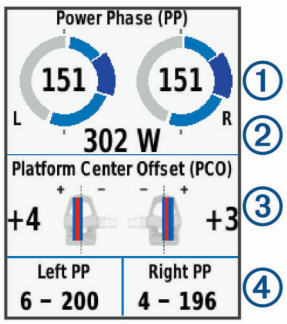

3. If necessary, hold a data field ④ to change it (*Adding a Data Screen*, page 20).

   NOTE: The two data fields at the bottom of the screen can be customized.

You can send the ride to the Garmin Connect app to view additional cycling dynamics data (*Sending Your Ride to Garmin Connect*, page 18).

Power Phase Data

Power phase is the pedal stroke region (between the start crank angle and the end crank angle) where you produce positive power.

Platform Center Offset

Platform center offset is the location on the pedal platform where you apply force.

Updating the Vector Software Using the Edge Device

Before you can update the software, you must pair your Edge device with your Vector system.

1. Send your ride data to your Garmin Connect account (*Sending Your Ride to Garmin Connect*, page 18).

   Garmin Connect automatically looks for software updates and sends them to your Edge device.
2. Bring your Edge device within range (3 m) of the sensor.
3. Rotate the crank arm a few times. The Edge device prompts you to install all pending software updates.
4. Follow the on-screen instructions.

Situational Awareness

Your Edge device can be used with the Varia Vision™ device, Varia™ smart bike lights, and rearview radar to improve situational awareness. See the owner's manual for your Varia device for more information.

NOTE: You may need to update the Edge software before pairing Varia devices (*Updating the Software Using Garmin Express*, page 22).

Using Electronic Shifters

Before you can use compatible electronic shifters, such as Shimano® Di2™ shifters, you must pair them with your device (*Pairing Your Wireless Sensors*, page 16). You can customize the optional data fields (*Adding a Data Screen*, page 20). The Edge 830 device displays current adjustment values when the sensor is in adjustment mode.

Using an eBike

Before you can use a compatible eBike, such as a Shimano STEPS™ eBike, you must pair it with your device (*Pairing Your Wireless Sensors*, page 16). You can customize the optional eBike data screen and data fields (*Adding a Data Screen*, page 20).

Viewing eBike Sensor Details

1. Select ☰ > **Sensors**.
2. Select your eBike.
3. Select an option:
   - To view eBike details, such as the odometer or travel distance, select **Sensor Details** > **eBike Details**.
   - To view eBike error messages, select ⚠.

   See the eBike owner's manual for more information.

inReach® Remote

The inReach remote function allows you to control your inReach device using your Edge device. Go to buy.garmin.com to purchase an inReach device.

Using the inReach Remote

1. Turn on the inReach device.
2. On your Edge device, select ☰ > **Sensors** > **Add Sensor** > **inReach**.
3. Select your inReach device, and select **Add**.
4. From the home screen, swipe down, and swipe left or right to view the inReach remote widget.
5. Select an option:
   - To send a preset message, select ⅊ > **Send Preset**, and select a message from the list.
   - To send a text message, select ⅊ > **Start Conversation**, select the message contacts, and enter the message text or select a quick text option.
   - To view the timer and distance traveled during a tracking session, select ➚ > **Start Tracking**.
   - To send an SOS message, select **SOS**.

     NOTE: You should only use the SOS function in a real emergency situation.

History

History includes time, distance, calories, speed, lap data, elevation, and optional ANT+ sensor information.

NOTE: History is not recorded while the timer is stopped or paused.

When the device memory is full, a message appears. The device does not automatically delete or overwrite your history. Upload your history to Garmin Connect periodically to keep track of all your ride data.

Viewing Your Ride

1 Select ☰ > **History** > **Rides**.
2 Select a ride.
3 Select an option.

Viewing Your Time in Each Training Zone

Before you can view your time in each training zone, you must pair your device with a compatible heart rate monitor or power meter, complete an activity, and save the activity.

Viewing your time in each heart rate and power zone can help you adjust your training intensity. You can adjust your power zones (*Setting Your Power Zones*, page 16) and your heart rate zones (*Setting Your Heart Rate Zones*, page 15) to match your goals and abilities. You can customize a data field to display your time in training zones during your ride (*Adding a Data Screen*, page 20).

1 Select ☰ > **History** > **Rides**.
2 Select a ride.
3 Select an option:
   - If your ride has data from one sensor, select **Time in HR Zone** or **Time in Power Zone**.
   - If your ride has data from both sensors, select **Time in Zone**, and select **Heart Rate Zones** or **Power Zones**.

Deleting a Ride

1 Select ☰ > **History** > **Rides** > 🗑.
2 Select one or more rides to delete.
3 Select ✔.

Viewing Data Totals

You can view the accumulated data you have saved to the device, including the number of rides, time, distance, and calories.

Select ☰ > **History** > **Totals**.

Garmin Connect

You can connect with your friends on Garmin Connect. Garmin Connect gives you the tools to track, analyze, share, and encourage each other. Record the events of your active lifestyle including runs, walks, rides, swims, hikes, triathlons, and more.

You can create your free Garmin Connect account when you pair your device with your phone using the Garmin Connect app, or you can go to connect.garmin.com.

Store your activities: After you complete and save an activity with your device, you can upload that activity to Garmin Connect and keep it as long as you want.

Analyze your data: You can view more detailed information about your activity, including time, distance, elevation, heart rate, calories burned, cadence, an overhead map view, pace and speed charts, and customizable reports.

NOTE: Some data requires an optional accessory such as a heart rate monitor.

Plan your training: You can choose a fitness goal and load one of the day-by-day training plans.

Share your activities: You can connect with friends to follow each other's activities or post links to your activities on your favorite social networking sites.

Sending Your Ride to Garmin Connect

- Sync your Edge device with the Garmin Connect app on your smartphone.
- Use the USB cable that came with your Edge device to send ride data to your Garmin Connect account on your computer.

Data Recording

The device uses smart recording. It records key points where you change direction, speed, or heart rate.

When a power meter is paired, the device records points every second. Recording points every second provides an extremely detailed track, and uses more of the available memory.

For information about data averaging for cadence and power, see *Data Averaging for Cadence or Power*, page 16.

Data Management

NOTE: The device is not compatible with Windows® 95, 98, Me, Windows NT®, and Mac® OS 10.3 and earlier.

Connecting the Device to Your Computer

NOTICE

To prevent corrosion, thoroughly dry the USB port, the weather cap, and the surrounding area before charging or connecting to a computer.

1 Pull up the weather cap from the USB port.
2 Plug the small end of the USB cable into the USB port.
3 Plug the large end of the USB cable into a computer USB port.

   Your device appears as a removable drive in My Computer on Windows computers and as a mounted volume on Mac computers.

Transferring Files to Your Device

1 Connect the device to your computer.

   On Windows computers, the device appears as a removable drive or a portable device. On Mac computers, the device appears as a mounted volume.

   NOTE: Some computers with multiple network drives may not display device drives properly. See your operating system documentation to learn how to map the drive.
2 On your computer, open the file browser.
3 Select a file.
4 Select **Edit** > **Copy**.
5 Open the portable device, drive, or volume for the device.

6 Browse to a folder.
7 Select **Edit** > **Paste**.
The file appears in the list of files in the device memory.

Deleting Files

NOTICE

If you do not know the purpose of a file, do not delete it. Your device memory contains important system files that should not be deleted.

1 Open the **Garmin** drive or volume.
2 If necessary, open a folder or volume.
3 Select a file.
4 Press the **Delete** key on your keyboard.
NOTE: If you are using an Apple® computer, you must empty the Trash folder to completely remove the files.

Disconnecting the USB Cable

If your device is connected to your computer as a removable drive or volume, you must safely disconnect your device from your computer to avoid data loss. If your device is connected to your Windows computer as a portable device, it is not necessary to safely disconnect the device.

1 Complete an action:
- For Windows computers, select the **Safely Remove Hardware** icon in the system tray, and select your device.
- For Apple computers, select the device, and select **File** > **Eject**.

2 Disconnect the cable from your computer.

Customizing Your Device

Connect IQ Downloadable Features

You can add Connect IQ features to your device from Garmin and other providers using the Connect IQ Mobile app.

Data Fields: Allow you to download new data fields that present sensor, activity, and history data in new ways. You can add Connect IQ data fields to built-in features and pages.

Widgets: Provide information at a glance, including sensor data and notifications.

Apps: Add interactive features to your device, such as new outdoor and fitness activity types.

Downloading Connect IQ Features Using Your Computer

1 Connect the device to your computer using a USB cable.
2 Go to apps.garmin.com, and sign in.
3 Select a Connect IQ feature, and download it.
4 Follow the on-screen instructions.

Profiles

The Edge has several ways for you to customize the device, including profiles. Profiles are a collection of settings that optimize your device based on how you are using it. For example, you can create different settings and views for training and mountain biking.

When you are using a profile and you change settings such as data fields or units of measurement, the changes are saved automatically as part of the profile.

Activity Profiles: You can create activity profiles for each type of biking. For example, you can create a separate activity profile for training, for racing, and for mountain biking. The activity profile includes customized data pages, activity totals, alerts, training zones (such as heart rate and speed), training settings (such as Auto Pause® and Auto Lap®), and navigation settings.

User Profile: You can update your gender, age, weight, and height settings. The device uses this information to calculate accurate ride data.

Setting Up Your User Profile

You can update your gender, age, weight, and height settings. The device uses this information to calculate accurate ride data.

1 Select ☰ > **My Stats** > **User Profile**.
2 Select an option.

About Training Settings

The following options and settings allow you to customize your device based on your training needs. These settings are saved to an activity profile. For example, you can set time alerts for your racing profile and you can set an Auto Lap position trigger for your mountain biking profile.

Updating Your Activity Profile

You can customize ten activity profiles. You can customize your settings and data fields for a particular activity or trip.

1 Select ☰ > **Activity Profiles**.
2 Select an option:
- Select a profile.
- Select **Create New** to add or copy a profile.

3 If necessary, edit the name and color for the profile.
4 Select an option:
- Select **Data Screens** to customize the data screens and data fields (*Adding a Data Screen*, page 20).
- Select **Default Ride Type** to set the type of ride that is typical for this activity profile, such as commuting.
  TIP: After a ride that is not typical, you can manually update the ride type. Accurate ride type data is important for creating bike friendly courses.
- Select **Segments** to turn on your enabled segments (*Enabling Segments*, page 4).
- Select **ClimbPro** to enable the ClimbPro feature (*Using ClimbPro*, page 12).
- Select **Alerts** to customize your training alerts (*Alerts*, page 20).
- Select **Auto Features** > **Auto Lap** to set how laps are triggered (*Marking Laps by Position*, page 20).
- Select **Auto Features** > **Auto Sleep** to automatically enter sleep mode after five minutes of inactivity (*Using Auto Sleep*, page 21).
- Select **Auto Features** > **Auto Pause** to change when the activity timer automatically pauses (*Using Auto Pause*, page 21).
- Select **Auto Features** > **Auto Scroll** to customize the display of the training data screens when the activity timer is running (*Using Auto Scroll*, page 21).
- Select **Timer Start Mode** to customize how the device detects the start of a ride and automatically starts the activity timer (*Starting the Timer Automatically*, page 21).
- Select **Nutrition/Hydration** to enable food and drink consumption tracking.
- Select **Navigation** > **Map** to customize the map settings (*Map Settings*, page 12).
- Select **Navigation** > **Routing** to customize the routing settings (*Route Settings*, page 12).
- Select **Navigation** > **Navigation Prompts** to show navigation messages using a map view or text prompt.

- Select **Navigation** > **Sharp Bend Warnings** to enable navigation warning messages for difficult turns.
- Select **GPS Mode** to turn off GPS (*Training Indoors*, page 6) or change the satellite setting (*Changing the Satellite Setting*, page 21).

All changes are saved to the activity profile.

Adding a Data Screen

1. Select ☰ > **Activity Profiles**.
2. Select a profile.
3. Select **Data Screens** > **Add New** > **Data Screen**.
4. Select a category, and select one or more data fields.
5. Select ↩.
6. Select an option.
   - Select another category to select more data fields.
   - Select ✓.
7. Swipe left or right to change the layout.
8. Select ›.
9. Select an option.
   - Tap a data field, then tap another data field to rearrange them.
   - Double-tap a data field to change it.
10. Select ✓.

Editing a Data Screen

1. Select ☰ > **Activity Profiles**.
2. Select a profile.
3. Select **Data Screens**.
4. Select a data screen.
5. Select **Layout and Data Fields**.
6. Swipe left or right to change the layout.
7. Select ›.
8. Select an option.
   - Tap a data field, then tap another data field to rearrange them.
   - Double-tap a data field to change it.
9. Select ✓.

Rearranging Data Screens

1. Select ☰ > **Activity Profiles**.
2. Select a profile.
3. Select **Data Screens** > ⇕.
4. Select a data screen.
5. Select ▲ or ▼.
6. Select ✓.

Alerts

You can use alerts to train toward specific time, distance, calorie, heart rate, cadence, and power goals. Alert settings are saved with your activity profile.

Setting Range Alerts

If you have an optional heart rate monitor, cadence sensor, or power meter, you can set up range alerts. A range alert notifies you when the device measurement is above or below a specified range of values. For example, you can set the device to alert you when your cadence is below 40 RPM and over 90 RPM. You can also use a training zone for the range alert (*Training Zones*, page 10).

1. Select ☰ > **Activity Profiles**.
2. Select a profile.
3. Select **Alerts**.
4. Select **Heart Rate Alert**, **Cadence Alert**, or **Power Alert**.
5. Select the minimum and maximum values, or select zones.

Each time you exceed or drop below the specified range, a message appears. The device also beeps if audible tones are turned on (*Turning the Device Tones On and Off*, page 22).

Setting Recurring Alerts

A recurring alert notifies you each time the device records a specified value or interval. For example, you can set the device to alert you every 30 minutes.

1. Select ☰ > **Activity Profiles**.
2. Select a profile.
3. Select **Alerts**.
4. Select an alert type.
5. Turn on the alert.
6. Enter a value.
7. Select ✓.

Each time you reach the alert value, a message appears. The device also beeps if audible tones are turned on (*Turning the Device Tones On and Off*, page 22).

Setting Smart Eat and Drink Alerts

A smart alert notifies you to eat or drink at strategic intervals based on current ride conditions. Smart alert estimates for a ride are based on the temperature, elevation gain, speed, duration, and heart rate and power data (if applicable).

1. Select ☰ > **Activity Profiles**.
2. Select a profile.
3. Select **Alerts**.
4. Select **Eat Alert** or **Drink Alert**.
5. Turn on the alert.
6. Select **Type** > **Smart**.

Each time you reach the estimated smart alert value, a message appears. The device also beeps if audible tones are turned on (*Turning the Device Tones On and Off*, page 22).

Auto Lap

Marking Laps by Position

You can use the Auto Lap feature to mark the lap at a specific position automatically. This feature is helpful for comparing your performance over different parts of a ride (for example, a long climb or training sprints). During courses, you can use the By Position option to trigger laps at all of the lap positions saved in the course.

1. Select ☰ > **Activity Profiles**.
2. Select a profile.
3. Select **Auto Features** > **Auto Lap** > **Auto Lap Trigger** > **By Position** > **Lap At**.
4. Select an option:
   - Select **Lap Press Only** to trigger the lap counter each time you select ⟲ and each time you pass any of those locations again.
   - Select **Start and Lap** to trigger the lap counter at the GPS location where you select ▶ and at any location during the ride where you select ⟲.
   - Select **Mark and Lap** to trigger the lap counter at a specific GPS location marked before the ride and at any location during the ride where you select ⟲.
5. If necessary, customize the lap data fields (*Adding a Data Screen*, page 20).

Marking Laps by Distance

You can use the Auto Lap feature to mark the lap at a specific distance automatically. This feature is helpful for comparing your

performance over different parts of a ride (for example, every 10 miles or 40 kilometers).

1 Select ☰ > **Activity Profiles**.
2 Select a profile.
3 Select **Auto Features** > **Auto Lap** > **Auto Lap Trigger** > **By Distance** > **Lap At**.
4 Enter a value.
5 If necessary, customize the lap data fields (*Adding a Data Screen*, page 20).

Using Auto Sleep

You can use the Auto Sleep feature to automatically enter sleep mode after 5 minutes of inactivity. During sleep mode, the screen is turned off and the ANT+ sensors, Bluetooth, and GPS are disabled.

Wi-Fi continues to run while the device is asleep.

1 Select ☰ > **Activity Profiles**.
2 Select a profile.
3 Select **Auto Features** > **Auto Sleep**.

Using Auto Pause

You can use the Auto Pause feature to pause the timer automatically when you stop moving or when your speed drops below a specified value. This feature is helpful if your ride includes stop lights or other places where you need to slow down or stop.

NOTE: History is not recorded while the timer is stopped or paused.

1 Select ☰ > **Activity Profiles**.
2 Select a profile.
3 Select **Auto Features** > **Auto Pause**.
4 Select an option:
   - Select **When Stopped** to pause the timer automatically when you stop moving.
   - Select **Custom Speed** to pause the timer automatically when your speed drops below a specified value.
5 If necessary, customize optional time data fields (*Adding a Data Screen*, page 20).

Using Auto Scroll

You can use the Auto Scroll feature to automatically cycle through all of the training data screens while the timer is running.

1 Select ☰ > **Activity Profiles**.
2 Select a profile.
3 Select **Auto Features** > **Auto Scroll**.
4 Select a display speed.

Starting the Timer Automatically

This feature automatically detects when your device has acquired satellites and is moving. It starts the activity timer or reminds you to start the activity timer so you can record your ride data.

1 Select ☰ > **Activity Profiles**.
2 Select a profile.
3 Select **Timer Start Mode**.
4 Select an option:
   - Select **Manual**, and select ▶ to start the activity timer.
   - Select **Prompted** to display a visual reminder when you reach the start notice speed.
   - Select **Auto** to start the activity timer automatically when you reach the start speed.

Changing the Satellite Setting

For increased performance in challenging environments and faster GPS position location, you can enable GPS + GLONASS or GPS + GALILEO. Using GPS and another satellite together reduces battery life more quickly than using only GPS.

1 Select ☰ > **Activity Profiles**.
2 Select a profile.
3 Select **GPS Mode**.
4 Select an option.

Phone Settings

Select ☰ > **Connected Features** > **Phone**.

Enable: Enables Bluetooth technology.

NOTE: Other Bluetooth settings appear only when Bluetooth wireless technology is enabled.

Friendly Name: Allows you to enter a friendly name that identifies your devices with Bluetooth technology.

Pair Smartphone: Connects your device with a compatible Bluetooth enabled smartphone. This setting allows you to use Bluetooth connected features, including LiveTrack and activity uploads to Garmin Connect.

Smart Notifications: Allows you to enable phone notifications from your compatible smartphone.

Missed Notifications: Displays missed phone notifications from your compatible smartphone.

Text Reply Signature: Enables signatures in your text message replies.

System Settings

Select ☰ > **System**.

- Display Settings (*Display Settings*, page 21)
- Widget Settings (*Customizing the Widget Loop*, page 22)
- Data Recording Settings (*Data Recording Settings*, page 22)
- Unit Settings (*Changing the Units of Measure*, page 22)
- Tone Settings (*Turning the Device Tones On and Off*, page 22)
- Language Settings (*Changing the Device Language*, page 22)

Display Settings

Select ☰ > **System** > **Display**.

Auto Brightness: Automatically adjusts the backlight brightness based on the ambient light.

Brightness: Sets the backlight brightness.

Backlight Timeout: Sets the length of time before the backlight turns off.

Color Mode: Sets the device to display day or night colors. You can select the Auto option to allow the device to set day or night colors automatically based on the time of day.

Screen Capture: Allows you to save the image of the device screen.

Using the Backlight

You can tap the touchscreen to turn on the backlight.

NOTE: You can adjust the backlight timeout (*Display Settings*, page 21).

1 From the home screen or a data screen, swipe down from the top of the screen.
2 Select an option:
   - To manually adjust the brightness, select ☼, and use the slider bar.

- To allow the device to automatically adjust the brightness based on the ambient light, select **Auto**.

Customizing the Widget Loop

You can change the order of widgets in the widget loop, remove widgets, and add new widgets.

1. Select ☰ > **System** > **Widget Management**.
2. Select a widget to add or remove it from the widget loop.
3. Select ⇕ to change the location of a widget in the widget loop.

Data Recording Settings

Select ☰ > **System** > **Data Recording**.

Recording Interval: Controls how the device records activity data. The Smart option records key points where you change direction, speed, or heart rate. The 1 Sec option records points every second. It creates a very detailed record of your activity and increases the size of the stored activity file.

Cadence Averaging: Controls whether the device includes zero values for cadence data that occur when you are not pedaling (*Data Averaging for Cadence or Power*, page 16).

Power Averaging: Controls whether the device includes zero values for power data that occur when you are not pedaling (*Data Averaging for Cadence or Power*, page 16).

Log HRV: Sets the device to record your heart rate variability during an activity.

Changing the Units of Measure

You can customize units of measure for distance and speed, elevation, temperature, weight, position format, and time format.

1. Select ☰ > **System** > **Units**.
2. Select a measurement type.
3. Select a unit of measure for the setting.

Turning the Device Tones On and Off

Select ☰ > **System** > **Tones**.

Changing the Device Language

Select ☰ > **System** > **Language**.

Time Zones

Each time you turn on the device and acquire satellites or sync with your smartphone, the device automatically detects your time zone and the current time of day.

Setting Up Extended Display Mode

You can use your Edge 830 device as an extended display to view data screens from a compatible Garmin multisport watch. For example, you can pair a compatible Forerunner device to display its data screens on your Edge device during a triathlon.

1. From your Edge device, select ☰ > **Extended Display Mode** > **Connect Watch**.
2. From your compatible Garmin watch, select **Settings** > **Sensors & Accessories** > **Add New** > **Extended Display**.
3. Follow the on-screen instructions on your Edge device and Garmin watch to complete the pairing process.

   The data screens from your paired watch appear on the Edge device when the devices are paired.

   NOTE: Normal Edge device functions are disabled while using Extended Display mode.

After pairing your compatible Garmin watch with your Edge device, they connect automatically the next time you use Extended Display mode.

Exiting Extended Display Mode

While the device is in Extended Display mode, tap the screen, and select **Exit Extended Display Mode** > ✔.

Device Information

Product Updates

On your computer, install Garmin Express (www.garmin.com/express). On your smartphone, install the Garmin Connect app.

This provides easy access to these services for Garmin devices:

- Software updates
- Map updates
- Data uploads to Garmin Connect
- Product registration

Updating the Software Using the Garmin Connect App

Before you can update your device software using the Garmin Connect app, you must have a Garmin Connect account, and you must pair the device with a compatible smartphone (*Pairing Your Smartphone*, page 1).

Sync your device with the Garmin Connect app.

When new software is available, the Garmin Connect app automatically sends the update to your device.

Updating the Software Using Garmin Express

Before you can update your device software, you must have a Garmin Connect account, and you must download the Garmin Express application.

1. Connect the device to your computer using the USB cable.

   When new software is available, Garmin Express sends it to your device.
2. Follow the on-screen instructions.
3. Do not disconnect your device from the computer during the update process.

   NOTE: If you have already set up your device with Wi-Fi connectivity, Garmin Connect can automatically download available software updates to your device when it connects using Wi-Fi.

Specifications

Edge Specifications

Battery type	Rechargeable, built-in lithium-ion battery
Battery life	Up to 20 hr., typical usage
Operating temperature range	From -20º to 60ºC (from -4º to 140ºF)
Charging temperature range	From 0º to 45ºC (from 32º to 113ºF)
Wireless frequency/protocol	2.4 GHz @ 16.4 dBm nominal
Water rating	IEC 60529 IPX7[1]

Heart Rate Monitor Specifications

Battery type	User-replaceable CR2032, 3 V
Battery life	Up to 3.5 yr. at 1 hr./day
Water resistance	1 ATM[2] **NOTE:** This product does not transmit heart rate data while swimming.
Operating temperature range	From -5° to 50°C (from 23° to 122°F)
Wireless frequency/protocol	2.4 GHz @ 2 dBm nominal

Speed Sensor and Cadence Sensor Specifications

Battery type	User-replaceable CR2032, 3 V
Battery life	Approximately 12 mo. at 1 hr./day

[1] The device withstands incidental exposure to water of up to 1 m for up to 30 min. For more information, go to www.garmin.com/waterrating.
[2] The device withstands pressure equivalent to a depth of 10 m. For more information, go to www.garmin.com/waterrating.

Speed sensor storage	Up to 300 hr. of activity data
Operating temperature range	From -20º to 60ºC (from -4º to 140ºF)
Wireless frequency/protocol	2.4 GHz @ 4 dBm nominal
Water rating	IEC 60529 IPX7[1]

Viewing Device Information

You can view device information, such as the unit ID, software version, and license agreement.

Select ☰ > **System** > **About** > **Copyright Info**.

Viewing Regulatory and Compliance Information

The label for this device is provided electronically. The e-label may provide regulatory information, such as identification numbers provided by the FCC or regional compliance markings, as well as applicable product and licensing information.

1 Select ☰.
2 Select **System** > **Regulatory Info**.

Device Care

NOTICE

Do not store the device where prolonged exposure to extreme temperatures can occur, because it can cause permanent damage.

Never use a hard or sharp object to operate the touchscreen, or damage may result.

Avoid chemical cleaners, solvents, and insect repellents that can damage plastic components and finishes.

Secure the weather cap tightly to prevent damage to the USB port.

Cleaning the Device

1 Wipe the device using a cloth dampened with a mild detergent solution.
2 Wipe it dry.

After cleaning, allow the device to dry completely.

Caring for the Heart Rate Monitor

NOTICE

You must unsnap and remove the module before washing the strap.

A build up of sweat and salt on the strap can decrease the ability of the heart rate monitor to report accurate data.

- Go to www.garmin.com/HRMcare for detailed washing instructions.
- Rinse the strap after every use.
- Machine wash the strap after every seven uses.
- Do not put the strap in a dryer.
- When drying the strap, hang it up or lay it flat.
- To prolong the life of your heart rate monitor, unsnap the module when not in use.

User Replaceable Batteries

⚠ WARNING

See the *Important Safety and Product Information* guide in the product box for product warnings and other important information.

Replacing the Heart Rate Monitor Battery

1 Use a small Phillips screwdriver to remove the four screws on the back of the module.
2 Remove the cover and battery.

3 Wait 30 seconds.
4 Insert the new battery with the positive side facing up.

NOTE: Do not damage or lose the O-ring gasket.

5 Replace the back cover and the four screws.

NOTE: Do not overtighten.

After you replace the heart rate monitor battery, you may need to pair it with the device again.

Replacing the Speed Sensor Battery

The device uses one CR2032 battery. The LED flashes red to indicate a low battery level after two revolutions.

1 Locate the circular battery cover ① on the front of the sensor.

2 Twist the cover counter-clockwise until the cover is loose enough to remove.
3 Remove the cover and the battery ②.
4 Wait 30 seconds.
5 Insert the new battery into the cover, observing polarity.

NOTE: Do not damage or lose the O-ring gasket.

6 Twist the cover clockwise so that the marker on the cover aligns with the marker on the case.

NOTE: The LED flashes red and green for a few seconds after battery replacement. When the LED flashes green and then stops flashing, the device is active and ready to send data.

Replacing the Cadence Sensor Battery

The device uses one CR2032 battery. The LED flashes red to indicate a low battery level after two revolutions.

1 Locate the circular battery cover ① on the back of the sensor.

[1] The device withstands incidental exposure to water of up to 1 m for up to 30 min. For more information, go to www.garmin.com/waterrating.

2 Twist the cover counter-clockwise until the marker points to unlocked and the cover is loose enough to remove.
3 Remove the cover and the battery ②.
4 Wait 30 seconds.
5 Insert the new battery into the cover, observing polarity.

NOTE: Do not damage or lose the O-ring gasket.

6 Twist the cover clockwise until the marker points to locked.

NOTE: The LED flashes red and green for a few seconds after battery replacement. When the LED flashes green and then stops flashing, the device is active and ready to send data.

Troubleshooting

Resetting the Device

If the device stops responding, you may need to reset it. This does not erase any of your data or settings.

Hold ⏻ for 10 seconds.

The device resets and turns on.

Restoring the Default Settings

You can restore the default configuration settings and activity profiles. This will not remove your history or activity data, such as rides, workouts, and courses.

Select ☰ > **System** > **Device Reset** > **Reset Default Settings** > ✓.

Clearing User Data and Settings

You can clear all user data and restore the device to its initial setup. This removes your history and data, such as rides, workouts, and courses, and resets the device settings and activity profiles. This will not remove any files you added to the device from your computer.

Select ☰ > **System** > **Device Reset** > **Delete Data and Reset Settings** > ✓.

Maximizing Battery Life

- Turn on **Battery Save Mode** (*Turning On Battery Save Mode*, page 24).
- Decrease the backlight brightness (*Using the Backlight*, page 21) or shorten the backlight timeout (*Display Settings*, page 21).
- Select the **Smart** recording interval (*Data Recording Settings*, page 22).
- Turn on the **Auto Sleep** feature (*Using Auto Sleep*, page 21).
- Turn off the **Bluetooth** wireless feature (*Phone Settings*, page 21).
- Select the **GPS** setting (*Changing the Satellite Setting*, page 21).
- Remove wireless sensors that you no longer use.

Turning On Battery Save Mode

Battery save mode adjusts the settings automatically to extend the battery life for longer rides. During an activity, the screen turns off. You can enable automatic alerts and tap the screen to wake it up. Battery save mode records GPS track points and sensor data less frequently. Speed, distance, and track data accuracy are reduced.

NOTE: History is recorded in battery save mode when the timer is running.

1 Select ☰ > **Battery Save Mode** > **Enable**.
2 Select the alerts that wake up the screen during an activity.

After your ride, you should charge your device and disable battery save mode to use all the device features.

My phone will not connect to the device

If your phone will not connect to the device, you can try these tips.

- Turn off your smartphone and your device, and turn them back on again.
- Enable Bluetooth technology on your smartphone.
- Update the Garmin Connect app to the latest version.
- Remove your device from the Garmin Connect app and the Bluetooth settings on your smartphone to retry the pairing process.
- If you bought a new smartphone, remove your device from the Garmin Connect app on the smartphone you intend to stop using.
- Bring your smartphone within 10 m (33 ft.) of the device.
- On your smartphone, open the Garmin Connect app, select ☰ or •••, and select **Garmin Devices** > **Add Device** to enter pairing mode.
- Select ☰ > **Connected Features** > **Phone** > **Pair Smartphone**.

Improving GPS Satellite Reception

- Frequently sync the device to your Garmin Connect account:
  - Connect your device to a computer using the USB cable and the Garmin Express application.
  - Sync your device to the Garmin Connect app using your Bluetooth enabled smartphone.
  - Connect your device to your Garmin Connect account using a Wi-Fi wireless network.

  While connected to your Garmin Connect account, the device downloads several days of satellite data, allowing it to quickly locate satellite signals.
- Take your device outside to an open area away from tall buildings and trees.
- Remain stationary for a few minutes.

My device is in the wrong language

1 Select ☰.
2 Scroll down to the last item in the list, and select it.
3 Scroll down to the sixth item in the list, and select it.
4 Scroll down to your language, and select it.

Setting Your Elevation

If you have accurate elevation data for your present location, you can manually calibrate the altimeter on your device.

1 Select **Navigation** > ☰ > **Set Elevation**.

2 Enter the elevation, and select ✓.

Calibrating the Compass

NOTICE

Calibrate the electronic compass outdoors. To improve heading accuracy, do not stand near objects that influence magnetic fields, such as vehicles, buildings, and overhead power lines.

Your device was already calibrated at the factory, and the device uses automatic calibration by default. If you experience irregular compass behavior, for example, after moving long distances or after extreme temperature changes, you can manually calibrate the compass.

1 Select ☰ > **System** > **Calibrate Compass**.
2 Follow the on-screen instructions.

Temperature Readings

The device may display temperature readings that are higher than the actual air temperature if the device is placed in direct sunlight, held in your hand, or is charging with an external battery pack. Also, the device will take some time to adjust to significant changes in temperature.

Replacement O-rings

Replacement bands (O-rings) are available for the mounts.

NOTE: Use Ethylene Propylene Diene Monomer (EPDM) replacement bands only. Go to http://buy.garmin.com, or contact your Garmin dealer.

Getting More Information

- Go to support.garmin.com for additional manuals, articles, and software updates.
- Go to buy.garmin.com, or contact your Garmin dealer for information about optional accessories and replacement parts.

Appendix

Data Fields

Some data fields require optional accessories to display data.

%FTP: The current power output as a percentage of functional threshold power.

%Heart Rate Reserve: The percentage of heart rate reserve (maximum heart rate minus resting heart rate).

%Max Heart Rate: The percentage of maximum heart rate.

10s Balance: The 10-second moving average of the left/right power balance.

10s Power: The 10-second moving average of power output.

10s Watts/kg: The 10-second moving average of power output in watts per kilogram.

30s Balance: The 30-second moving average of the left/right power balance.

30s Power: The 30-second moving average of power output.

30s VAM: The 30-second moving average of the average ascent velocity.

30s Watts/kg: The 30-second moving average of power output in watts per kilogram.

3s Balance: The three-second moving average of the left/right power balance.

3s Power: The 3-second moving average of power output.

3s Watts/kg: The 3-second moving average of power output in watts per kilogram.

60s Flow: The 60-second moving average of the flow score.

60s Grit: The 60-second moving average of the grit score.

Aerobic Training Effect: The impact of the current activity on your aerobic fitness level.

Anaerobic Training Effect: The impact of the current activity on your anaerobic fitness level.

Asc. to Next Course Pt.: The remaining ascent to the next point on the course.

Ascent Remaining: During a workout or course, the remaining ascent when you are using an elevation target.

Assist Mode: The current eBike assistance mode.

Avg %HRR: The average percentage of heart rate reserve (maximum heart rate minus resting heart rate) for the current activity.

Avg %Max Heart Rate: The average percentage of maximum heart rate for the current activity.

Avg Balance: The average left/right power balance for the current activity.

Avg Cadence: Cycling. The average cadence for the current activity.

Avg Heart Rate: The average heart rate for the current activity.

Avg L. Peak Pwr Phase: The average power phase peak angle for the left leg for the current activity.

Avg Lap Time: The average lap time for the current activity.

Avg Left Pwr Phase: The average power phase angle for the left leg for the current activity.

Avg PCO: The average platform center offset for the current activity.

Avg Power: The average power output for the current activity.

Avg R. Peak Pwr Phase: The average power phase peak angle for the right leg for the current activity.

Avg Right Pwr Phase: The average power phase angle for the right leg for the current activity.

Avg Speed: The average speed for the current activity.

Avg VAM: The average ascent velocity for the current activity.

Avg Watts/kg: The average power output in watts per kilogram.

Balance: The current left/right power balance.

Battery Level: The remaining battery power.

Battery Status: The remaining battery power of a bike light accessory.

Beam Angle Status: The headlight beam mode.

Cadence: Cycling. The number of revolutions of the crank arm. Your device must be connected to a cadence accessory for this data to appear.

Cadence Bars: A bar graph showing your current, average, and maximum cycling cadence values for the current activity.

Cadence Graph: A line graph showing your cycling cadence values for the current activity.

Calories: The amount of total calories burned.

Calories to Go: During a workout, the remaining calories when you are using a calorie target.

Course Pt. Distance: The remaining distance to the next point on the course.

Destination Location: The last point on the route or course.

Di2 Battery Level: The remaining battery power of a Di2 sensor.

Di2 Shift Mode: The current shift mode of a Di2 sensor.

Distance: The distance traveled for the current track or activity.

Distance Ahead: The distance ahead or behind the Virtual Partner.

Distance to Destination: The remaining distance to the final destination. You must be navigating for this data to appear.

Distance to Go: During a workout or course, the remaining distance when you are using a distance target.

Distance to Next: The remaining distance to the next waypoint on the route. You must be navigating for this data to appear.

Duration: The time remaining for the current workout step.

eBike Battery: The remaining battery power of an eBike.

Elapsed Time: The total time recorded. For example, if you start the timer and run for 10 minutes, then stop the timer for 5 minutes, then start the timer and run for 20 minutes, your elapsed time is 35 minutes.

Elevation: The altitude of your current location above or below sea level.

Elevation Graph: A line graph showing your current elevation, total ascent, and total descent for the current activity.

EPOC: The amount of excess post-exercise oxygen consumption (EPOC) for the current activity. EPOC indicates the strenuousness of your workout.

ETA at Destination: The estimated time of day when you will reach the final destination (adjusted to the local time of the destination). You must be navigating for this data to appear.

ETA at Next: The estimated time of day when you will reach the next waypoint on the route (adjusted to the local time of the waypoint). You must be navigating for this data to appear.

Flow: The measurement of how consistently you maintain speed and smoothness through turns in the current activity.

Front Gear: The front bike gear from a gear position sensor.

Gear Battery: The battery status of a gear position sensor.

Gear Combo: The current gear combination from a gear position sensor.

Gear Ratio: The number of teeth on the front and rear bike gears, as detected by a gear position sensor.

Gears: The front and rear bike gears from a gear position sensor.

GPS Accuracy: The margin of error for your exact location. For example, your GPS location is accurate to within +/- 3.65 m (12 ft.).

GPS Signal Strength: The strength of the GPS satellite signal.

Grade: The calculation of rise (elevation) over run (distance). For example, if for every 3 m (10 ft.) you climb you travel 60 m (200 ft.), the grade is 5%.

Grit: The measurement of difficulty for the current activity based on elevation, gradient, and rapid changes in direction.

Heading: The direction you are moving.

Heart Rate: Your heart rate in beats per minute (bpm). Your device must be connected to a compatible heart rate monitor.

Heart Rate Bars: A bar graph showing your current, average, and maximum heart rate values for the current activity.

Heart Rate Graph: A line graph showing your current, average, and maximum heart rate values for the current activity.

Heart Rate to Go: During a workout, the amount you are above or below the heart rate target.

Heart Rate Zone: The current range of your heart rate (1 to 5). The default zones are based on your user profile and maximum heart rate (220 minus your age).

HR Zone Graph: A line graph showing your current heart rate zone (1 to 5).

Intensity Factor: The Intensity Factor™ for the current activity.

Kilojoules: The accumulated work performed (power output) in kilojoules.

Lap %HRR: The average percentage of heart rate reserve (maximum heart rate minus resting heart rate) for the current lap.

Lap %Max Heart Rate: The average percentage of maximum heart rate for the current lap.

Lap Balance: The average left/right power balance for the current lap.

Lap Cadence: Cycling. The average cadence for the current lap.

Lap Distance: The distance traveled for the current lap.

Lap Flow: The overall flow score for the current lap.

Lap Grit: The overall grit score for the current lap.

Lap Heart Rate: The average heart rate for the current lap.

Lap L. Peak Pwr Phase: The average power phase peak angle for the left leg for the current lap.

Lap Left Pwr Phase: The average power phase angle for the left leg for the current lap.

Lap NP: The average Normalized Power for the current lap.

Lap PCO: The average platform center offset for the current lap.

Lap Power: The average power output for the current lap.

Lap R. Peak Pwr Phase: The average power phase peak angle for the right leg for the current lap.

Lap Right Pwr Phase: The average power phase angle for the right leg for the current lap.

Laps: The number of laps completed for the current activity.

Lap Speed: The average speed for the current lap.

Lap Time: The stopwatch time for the current lap.

Lap Time Seated: The time spent seated while pedaling for the current lap.

Lap Time Standing: The time spent standing while pedaling for the current lap.

Lap VAM: The average ascent velocity for the current lap.

Lap Watts/kg: The average power output in watts per kilogram for the current lap.

Last Lap Distance: The distance traveled for the last completed lap.

Last Lap Heart Rate: The average heart rate for the last completed lap.

Last Lap NP: The average Normalized Power for the last completed lap.

Last Lap Power: The average power output for the last completed lap.

Last Lap Speed: The average speed for the last completed lap.

Last Lap Time: The stopwatch time for the last completed lap.

Left Peak Pwr Phase: The current power phase peak angle for the left leg. Power phase peak is the angle range over which the rider produces the peak portion of the driving force.

Left Power Phase: The current power phase angle for the left leg. Power phase is the pedal stroke region where positive power is produced.

Light Mode: The light network configuration mode.

Lights Connected: The number of connected lights.

Max Lap Power: The top power output for the current lap.

Max Power: The top power output for the current activity.

Max Speed: The top speed for the current activity.

Next Point Location: The next point on the route or course.

Normalized Power: The Normalized Power™ for the current activity.

Odometer: A running tally of distance traveled for all trips. This total does not clear when resetting the trip data.

Pedal Smoothness: The measurement of how evenly a rider is applying force to the pedals throughout each pedal stroke.

Performance Condition: The performance condition score is a real-time assessment of your ability to perform.

Platform Center Offset: The platform center offset. Platform center offset is the location on the pedal platform where force is applied.

Power: The current power output in watts. Your device must be connected to a compatible power meter.

Power Bars: A bar graph showing your current, average, and maximum power output values for the current activity.

Power Graph: A line graph showing your current, average, and maximum power output values for the current activity.

Power Zone: The current range of power output (1 to 7) based on your FTP or custom settings.

Rear Gear: The rear bike gear from a gear position sensor.

Reps to Go: During a workout, the remaining repetitions.

Respiration Rate: Your respiration rate in breaths per minute (brpm).

Right Peak Pwr Phase: The current power phase peak angle for the right leg. Power phase peak is the angle range over which the rider produces the peak portion of the driving force.

Right Power Phase: The current power phase angle for the right leg. Power phase is the pedal stroke region where positive power is produced.

Shifting Advice: The recommendation to shift up or down based on your current effort. Your eBike must be in manual shifting mode.

Speed: The current rate of travel.

Speed Bars: A bar graph showing your current, average, and maximum speed values for the current activity.

Speed Graph: A line graph showing your speed for the current activity.

Step Time: The time elapsed for the current workout step.

Sunrise: The time of sunrise based on your GPS position.

Sunset: The time of sunset based on your GPS position.

Target: During a workout, the target for the workout step.

Target Power: The target power output during an activity.

Temperature: The temperature of the air. Your body temperature affects the temperature sensor.

Time Ahead: The time ahead or behind the Virtual Partner.

Time in Zone: The time elapsed in each heart rate or power zone.

Time of Day: The time of day based on your current location and time settings (format, time zone, daylight saving time).

Timer: The stopwatch time for the current activity.

Time Seated: The time spent seated while pedaling for the current activity.

Time Standing: The time spent standing while pedaling for the current activity.

Time to Destination: The estimated time remaining before you reach the destination. You must be navigating for this data to appear.

Time to Go: During a workout or course, the remaining time when you are using a time target.

Time to Next: The estimated time remaining before you reach the next waypoint in the route. You must be navigating for this data to appear.

Torque Effectiveness: The measurement of how efficiently a rider is pedaling.

Total Ascent: The total elevation distance ascended since the last reset.

Total Descent: The total elevation distance descended since the last reset.

Trainer Resistance: The resistance force applied by an indoor trainer.

Travel Range: The estimated distance you can travel based on the current eBike settings and remaining battery power.

TSS: The Training Stress Score™ for the current activity.

VAM: The average ascent velocity for the current activity.

Watts/kg: The amount of power output in watts per kilogram.

Workout Comparison: A graph comparing your current effort to the workout target.

Workout Step: During a workout, the current step out of the total number of steps.

VO2 Max. Standard Ratings

These tables include standardized classifications for VO2 max. estimates by age and gender.

Males	Percentile	20–29	30–39	40–49	50–59	60–69	70–79
Superior	95	55.4	54	52.5	48.9	45.7	42.1
Excellent	80	51.1	48.3	46.4	43.4	39.5	36.7
Good	60	45.4	44	42.4	39.2	35.5	32.3
Fair	40	41.7	40.5	38.5	35.6	32.3	29.4
Poor	0–40	<41.7	<40.5	<38.5	<35.6	<32.3	<29.4

Females	Percentile	20–29	30–39	40–49	50–59	60–69	70–79
Superior	95	49.6	47.4	45.3	41.1	37.8	36.7
Excellent	80	43.9	42.4	39.7	36.7	33	30.9
Good	60	39.5	37.8	36.3	33	30	28.1
Fair	40	36.1	34.4	33	30.1	27.5	25.9
Poor	0–40	<36.1	<34.4	<33	<30.1	<27.5	<25.9

Data reprinted with permission from The Cooper Institute. For more information, go to www.CooperInstitute.org.

FTP Ratings

These tables include classifications for functional threshold power (FTP) estimates by gender.

Males	Watts per Kilogram (W/kg)
Superior	5.05 and greater
Excellent	From 3.93 to 5.04
Good	From 2.79 to 3.92

Males	Watts per Kilogram (W/kg)
Fair	From 2.23 to 2.78
Untrained	Less than 2.23

Females	Watts per Kilogram (W/kg)
Superior	4.30 and greater
Excellent	From 3.33 to 4.29
Good	From 2.36 to 3.32
Fair	From 1.90 to 2.35
Untrained	Less than 1.90

FTP ratings are based on research by Hunter Allen and Andrew Coggan, PhD, *Training and Racing with a Power Meter* (Boulder, CO: VeloPress, 2010).

Heart Rate Zone Calculations

Zone	% of Maximum Heart Rate	Perceived Exertion	Benefits
1	50–60%	Relaxed, easy pace, rhythmic breathing	Beginning-level aerobic training, reduces stress
2	60–70%	Comfortable pace, slightly deeper breathing, conversation possible	Basic cardiovascular training, good recovery pace
3	70–80%	Moderate pace, more difficult to hold conversation	Improved aerobic capacity, optimal cardiovascular training
4	80–90%	Fast pace and a bit uncomfortable, breathing forceful	Improved anaerobic capacity and threshold, improved speed
5	90–100%	Sprinting pace, unsustainable for long period of time, labored breathing	Anaerobic and muscular endurance, increased power

Wheel Size and Circumference

Your speed sensor automatically detects your wheel size. If necessary, you can manually enter your wheel circumference in the speed sensor settings.

The tire size is marked on both sides of the tire. This is not a comprehensive list. You can also measure the circumference of your wheel or use one of the calculators available on the internet.

Tire Size	Wheel Circumference (mm)
20 × 1.75	1515
20 × 1-3/8	1615
22 × 1-3/8	1770
22 × 1-1/2	1785
24 × 1	1753
24 × 3/4 Tubular	1785
24 × 1-1/8	1795
24 × 1.75	1890
24 × 1-1/4	1905
24 × 2.00	1925
24 × 2.125	1965
26 × 7/8	1920
26 × 1-1.0	1913
26 × 1	1952
26 × 1.25	1953
26 × 1-1/8	1970
26 × 1.40	2005
26 × 1.50	2010
26 × 1.75	2023
26 × 1.95	2050
26 × 2.00	2055
26 × 1-3/8	2068
26 × 2.10	2068
26 × 2.125	2070
26 × 2.35	2083
26 × 1-1/2	2100
26 × 3.00	2170
27 × 1	2145
27 × 1-1/8	2155
27 × 1-1/4	2161
27 × 1-3/8	2169
29 x 2.1	2288
29 x 2.2	2298
29 x 2.3	2326
650 x 20C	1938
650 x 23C	1944
650 × 35A	2090
650 × 38B	2105
650 × 38A	2125
700 × 18C	2070
700 × 19C	2080
700 × 20C	2086
700 × 23C	2096
700 × 25C	2105
700C Tubular	2130
700 × 28C	2136
700 × 30C	2146
700 × 32C	2155
700 × 35C	2168
700 × 38C	2180
700 × 40C	2200
700 × 44C	2235
700 × 45C	2242
700 × 47C	2268

Index

A
accessories **14, 16, 25**
acclimation **7**
addresses, finding **10**
alerts **20**
altimeter, calibrating **24**
altitude **7**
ANT+ sensors **1, 14, 16, 17**
  fitness equipment **6**
  pairing **6, 16**
applications **12, 14, 19**
  smartphone **1**
assistance **13**
Auto Lap **20**
Auto Pause **21**
auto scroll **21**
auto sleep **21**

B
back to start **10**
backlight **21**
bands **25**
battery
  charging **2**
  maximizing **24**
  replacing **23**
  type **2**
Bluetooth sensors **1, 14**
Bluetooth technology **12, 14, 21**

C
cadence **16**
  alerts **20**
calendar **5**
calibrating, power meter **16**
calorie, alerts **20**
cleaning the device **23**
compass, calibrating **25**
computer, connecting **18**
Connect IQ **19**
contacts, adding **13**
courses **10–12**
  creating **11**
  deleting **12**
  editing **11**
  loading **11**
customizing the device **20**
cycling **7**
cycling dynamics **17**

D
data
  recording **22**
  screens **20**
  sharing **22**
  storing **18**
  transferring **18**
data averaging **16**
data fields **19, 20, 25**
data recording **18**
deleting, all user data **19, 24**
device
  care **23**
  resetting **24**
display settings **21**
distance, alerts **20**

E
eBike **17**
elevation **7, 24**
emergency contacts **13**
extended display **22**

F
files, transferring **18**
fitness **8**

G
Garmin Connect **1, 4, 5, 11, 12, 14, 18, 22**
Garmin Express **14**
  updating software **22**
GLONASS **21**
goals **6**
GPS **6, 21**
  signal **1, 3, 24**
GroupTrack **13, 14**

H
heart rate
  alerts **20**
  monitor **6–9, 15, 23**
  zones **15, 18, 28**
history **3, 17, 18**
  deleting **18**
  sending to computer **18**

I
icons **1**
incident detection **13**
indoor training **6**
initial setup **24**
inReach remote **17**
inReach remote **17**
installing **2, 15, 16**
intervals, workouts **5, 6**

K
keys **1**

L
language **22, 24**
laps **1**
LiveTrack **13, 14**
locations **10**
  deleting **10**
  editing **10**
  finding with the map **10**
  sending **13**
locking, screen **1**

M
maps **10, 11**
  finding locations **10**
  orientation **12**
  settings **12**
  updating **22**
mounting the device **2**

N
navigation **10**
  back to start **10**
  stopping **10**

O
O-rings. *See* bands
on-screen buttons **1**

P
pairing **1**
  ANT+ sensors **6, 16**
  Bluetooth sensors **16**
  smartphone **1, 24**
pedals **17**
performance condition **6, 9**
personal records **9, 10**
  deleting **10**
platform center offset **17**
points of interest (POI), finding **10**
power **17**
  zones **18**
power (force) **6**
  alerts **20**
  meters **6–9, 16, 17, 27**
  zones **16**
power phase **17**
profiles **19**
  activity **19**
  user **19**

R
recovery **6, 8, 9**
replacing the battery **23**
resetting the device **24**
routes **12**
  creating **11**
  settings **12**

S
satellite signals **1, 3, 24**
saving activities **3**
screen **21**
  locking **1**
segments **3, 4**
  deleting **4**
settings **14, 19, 21, 22**
  device **22, 24**
sharing data **22**
sleep mode **21**
smart recording **18**
smartphone **1, 12, 19, 21**
  applications **14**
  apps **14**
  pairing **1, 24**
software
  license **23**
  updating **17, 22**
  version **23**
specifications **22**
speed and cadence sensors **15, 16, 23**
start notice message **21**
storing data **18**
stress level **6**
stress score **9**
system settings **21**

T
target **6**
temperature **7, 25**
time, alerts **20**
time zones **22**
timer **3, 17**
tones **22**
touchscreen **1**
training **5–8**
  pages **3**
  plans **5**
  screens **20**
Training Effect **8, 9**
training load **6, 8**
training status **6, 7, 9**
transferring, files **14**
troubleshooting **15, 24, 25**

U
unit ID **23**
units of measure **22**
updates, software **17, 22**
USB **22**
  disconnecting **19**
user data, deleting **19**
user profile **19**

V
Virtual Partner **6**
VO2 max. **6, 7, 9, 27**

W
waypoints, projecting **10**
wheel sizes **28**
Wi-Fi **1**
Wi-Fi **12, 14, 22**
  connecting **14**
widgets **19**
workouts **4, 5**
  creating **4, 5**
  deleting **5**
  editing **5**
  loading **5**

Z

zones
- power **16**
- time **22**

support.garmin.com

May 2020

GUID-E907CICF-6838-46D3-9F29-CI522BCEA3BC v3